REVISION RECORD			
LTR	DESCRIPTION	APPROVED	DATE

2007.6.1: CODEC CHANGED TO WM9713
2007.6.13: S3C6400 CHANGED TO X51
2007.7.1: CODEC CHANGED TO WM8753
2007.7.25: changed lcd pin information .
2007.8.7: CHANGED CAMERA INFORMATION
2007.8.13: CHANGED 6400X51 INFORMATION :POP_VCCQ,POP_VCC CHANGED TO 1.8V
2007.8.14: WIFI_BLUETOOTH SCH IS PREPARED
2007.8.15: gsm module is ok
2007.8.15: IRMODULE IS PREPARED
2007.8.18: delete mic switch.add jtac of bluetooth and wifi. change vdd2.5v to Vrtc.seperate gnd and adgnd by r124
2007.8.29: add earphone jack(j201) .delete pcm mclk ,add pcm clk
2007.8.30: changed camera part .need mor information to confirm :pwdn level .pin sequense,and there are 10 bit data ,yuv need 8 bit data.
2007.8.31: changed photo_sensor to avago,add emi filter of audio speaker to prevent pwm emi of d amplifier,changed stf202 to eclamp0502b to prevent interfere of usb 2.0
2007.9.1: MOTO CHANGED TO VMT-04 (AAC)
2007.9.5: add c139. c240 for filtrate high frequently noise
2007.9.7: add r518,r519,r520,tp519 changed r511,r515
2007.9.9: changed camera pin map .
2007.9.9: changed accelary sensor to mem
2007.9.9: add a buck to creat pll1.0v .add system 3.0v.add otg3.0v add otg 1.0v delet onelnand to use nand plash .
2007.9.28: add movinand instead of nand flash (6400 only support 1.8v outside nandflash)
2007.9.28: use 6400-x51 instead of 6400-x52 for mor capacity of ddrsdram
2007.9.28: add R913,R914 for resistance control
2007.9.28: used i2s of 8876 instead of codec 8753(give up record by bluetooth)
2007.9.28: used differential input for micphone to pmb8876 .removed audio mic switch
2007.9.28: add a feedback of bfclkout to pmb 8876 by R1208
2007.9.28: used combone memory pf38f2030w0ytq1 insted of pf38f2030w0ytq0 for asynchronis mode
2007.9.28: used 3v gpio of 6400 to power on sm_power instead of used a switch to bat
2007.9.28: add c1122 to vbus of am_power to avoid supply float .
2007.9.28: add c1119 for vib bypass capacity
2007.9.28: add c1121 for vbat bypass capacity
2007.9.28: remove pullup resister of debug of pmb8876
2007.9.28: add r1037,r1038,rc1032 to reset to pmb 8876
2007.10.30: changed power to ltc 3555
2007.10.30: changed memory to movenand
2007.11.12: ADD P-MOS AND NPN IN SM-POWER FOR OPENING THE GSM SYSTEM
2007.11.12: add a resister IN the middle pin of battery to connect a ad convertor
2007.11.21 changed R843,R845 R846 to 1M ohm ,and changed c847 ,c848,c849 to 4.7NF to improve performence of touch panel
2007.11.28: debug: uart: capacitor from v- must connect to vdd to boost voltage
2007.12.04:48M CRYSTAL IS NOT WORKING .
2007.12.07:USE BATTERY CONNECTOR TO DETEC BATERRY DEFAULT AS SHEMATIC. .
2007.12.07:changed c1105,c1106 from 2.2u to 10u ,changed c625 from 10u to 100u
2007.12.13:add R406 ,R407,R408,R409 in spi of lcd to separate 1.8vI/O for lcd from 3.0vI/O for 6400
2007.12.28: The spi of lcd use 1.8V I/O instead of 3.0v I/O . LIST :CLK GPQ8, SIN CPQ7, SOUT GPQ5, SCS CPQ6, RESET GPQ4
2007.12.28: THE PACKAGE OF MOVENAND is changed to 14mm*18mm
2007.12.28: the bluetooth moudle is changed to BTTM46C2SB,and the wifi moudle is changed to SWL-N10
2008.1.5: ADD 2.8V LDO FOR LCD POWER
2008.1.5: ADD TWO KEYS : KEY 4,KEY 5
2008.1.5: USE gpio GPD4 from 6400 to open smpower
2008.1.10: USE gpio GPD1 to control vibrator
2008.1.10: USE rt9292 to instead of rt9284b
2008.1.11: use pin4 to detect headphone's inputing
2008.1.11: chaneged j301 to axk724147g for camera
2008.1.11: chaneged j803 to axk724147g for touchpanel
2008.1.11: delete rtc ic U105 so it can not wake mobile up after power off . add a ldo U604 to create 2.5v for rtc
2008.3.8 : use s3c6410-x51 .so changed list : delete rt8023 ,rt9266,rt9702 ,i2c1 is used by touchpanle ,remove host power changed pin information of usb connector ,add 1.8v on movenand ,add test point on uart0 for wifi testing
2008.4.17: add new reser IC u605 instead of reset from ltc3555.
2008.4.17: add a diodes in pbstat to seperate v3.3v from v3.0v,add a 3.0v from vbus to open the system

add low voltage detect ic u607,
add new reset ic u606
changed ltc3555 control .use i/o control instead of iic control .
08.09.18:ADD 1.2V LDO FOR WIFI ,CHANGED TSP POWER FROM 3.3V TO 3.0V
2008.4.22delete external mic ,add module insert detect and key adc

DRAWN: eric.huang	DATE: 2008.09.22	COMPANY: MEIZU			
		TITLE: M8			
QUALITY CONTROL:	CHECK:	CODE: V8	SIZE: A1	NAME: MEIZU	REV: v1
RELEASED	DATE:	SCALE:		SHEET: for 14	

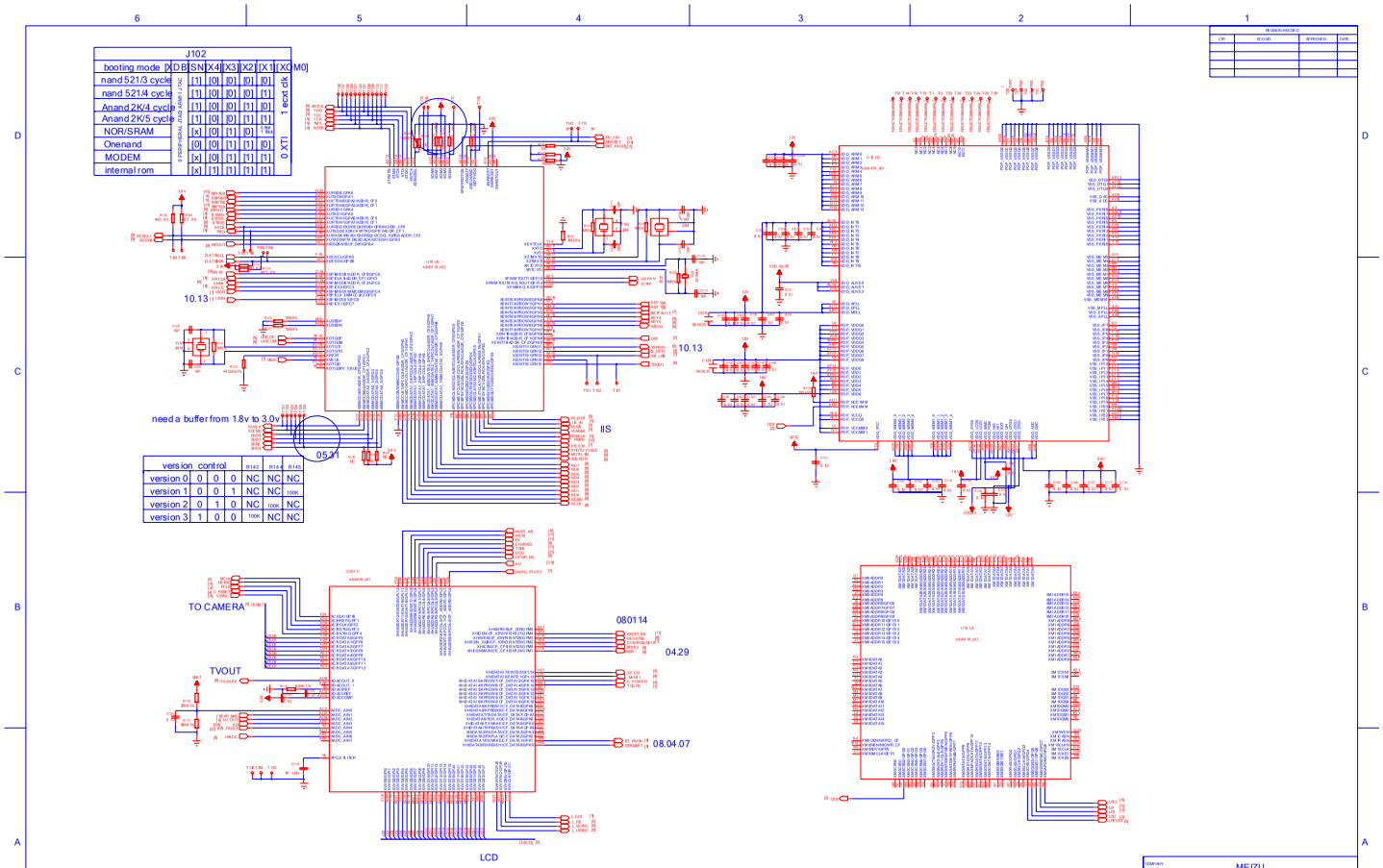
J102
booting mode [X[DB][SN][X4][X3][X2][X1][XO][M0]
nand 521/3 cycle [1] [0] [0] [0] [0] [0]
nand 521/4 cycle [1] [0] [0] [0] [0] [1]
Anand 2K/4 cycle [1] [0] [0] [0] [1] [0]
Anand 2K/5 cycle [1] [0] [0] [0] [1] [1]
NOR/SRAM [x] [0] [1] [0] [0] [0]
Onenand [0] [0] [1] [1] [0] [0]
MODEM [x] [0] [1] [1] [1] [1]
internal rom [x] [1] [1] [1] [1] [1]
2:PERIPHERAL 2:FAD ABIR 1:FAC
0:XT1 1:ecd clk
10.13
need a buffer from 1.8v to 3.0v
05.21
IIS
10.13
TO CAMERA
TVOUT
080114
04.29
08.04.07
LCD
version control R143 R144 R145
version 0 0 0 0 NC NC NC
version 1 0 0 1 NC NC 100K
version 2 0 1 0 NC 100K NC
version 3 1 0 0 100K NC NC
MEIZU
M8
V8
A1
MCU_6400
v1

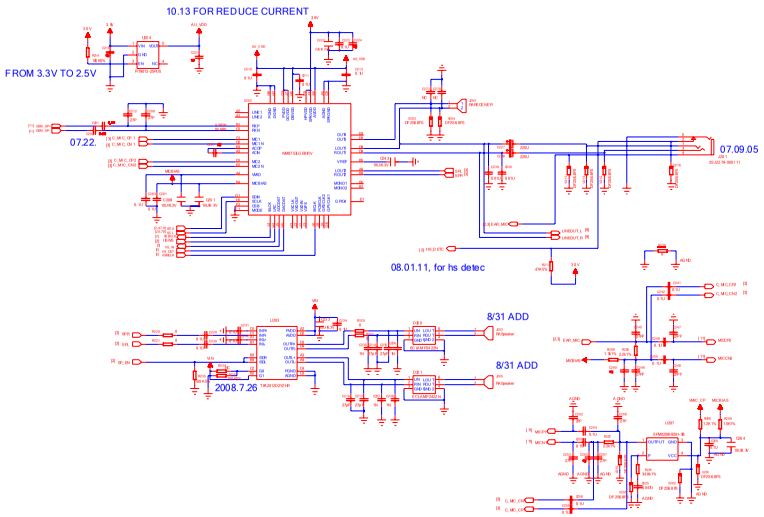

REVISION RECORD			
LTR	DESCRIPTION	APPROVED	DATE

COMPANY: MEIZU			
TITLE: M8			
CODE: V8	SIZE: A1	SHEET NAME: CODEC8753	REV: v1
SCALE:		SHEET 8/ 14	

DRAWN: eric.huang		DATE: 2008.09.22	
CHECKED:		DATE:	
QUALITY CONTROL:		DATE:	
RELEASED:		DATE:	

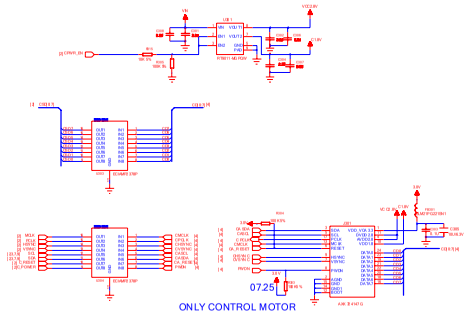

REVISION RECORD			
LTR	REVISED	APPROVED	DATE

COMPANY: MEIZU				
TITLE: M8				
CODE: V8	SIZE: A1	SHEET NAME: CAMERA		REV: v1
SCALE:		SHEET 6 OF 14		
DRAWN: eric.huang	DATE: 2008.09.22			
CHECKED:	DATE:			
QUALITY CONTROL:	DATE:			
RELEASED:	DATE:			

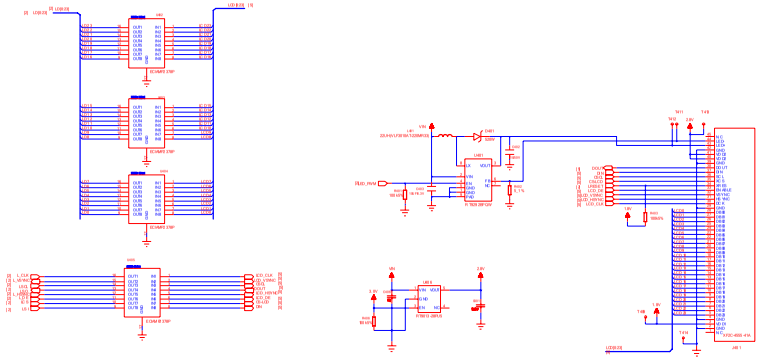

REVISION RECORD			
LTR	ECO NO	APPROVED	DATE

COMPANY: MEIZU			
TITLE: M8			
DRAWN: eric.huang	DATE: 2008.09.22		
CHECKED:	DATE:		
QUALITY CONTROL:	DATE:		
FILE NO.:	DATE:		

CODE:	SIZE:	SHEET NAME	REV:
V8	A1	LCD	v1
SCALE:		SHEET 5 OF 14	

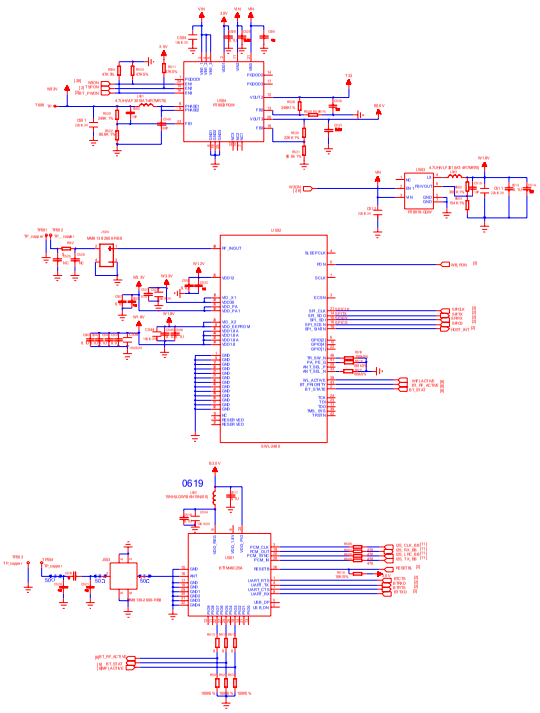

REVISION RECORD			
LTR	ECO NO.	APPROVED	DATE

COMPANY: MEIZU			
TITLE: M8			
CODE: V8	SIZE: A1	SHEET NAME: BLUETOOTH/HANDWIFI	REV: v1
SCALE:		SHEET 6 OF 14	

DRAWN: eric.huang	DATE: 2008.09.22		
CHECKED:	DATE:		
QUALITY CONTROL:	DATE:		
ISSUED:	DATE:		

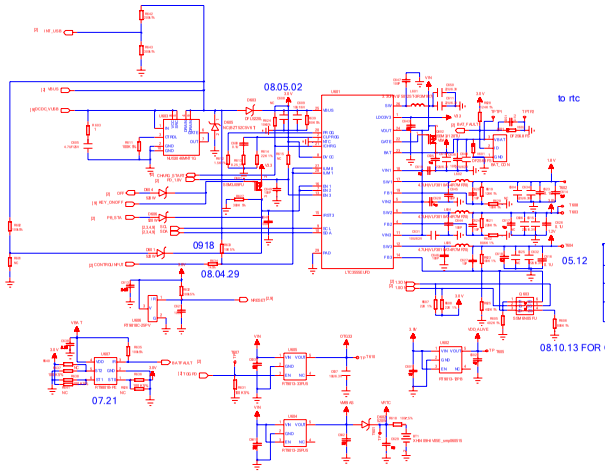

	1.0ON	1.3ON
1.0v	0	0
1.2v	1	0
1.3v	1	1

08.10.13 FOR CHANGE FREQUENCE

REVISION RECORD			
LTR	DESCRIPTION	APPROVED	DATE

DRAWN: eric.huang	DATE: 2008.09.22		
CHECKED:	DATE:		
QUALITY CONTROL:	DATE:		
TITLE AREA:	DATE:		

COMPANY: MEIZU

TITLE: M8

CODE:	SIZE:	SHEET NAME	REV:
V8	A1	POWER	v1

SCALE: | SHEET 21 OF 14

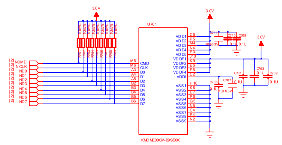

REVISION RECORD

LTR	ECO NO:	APPROVED:	DATE:

DRAWN: eric.huang	DATED: 2008.09.22	COMPANY: MEIZU	
CHECKED:	DATED:	TITLE: M8	
QUALITY CONTROL:	DATED:	CODE: V8	SIZE: A1
RELEASED:	DATED:	SHEET NAME: MEMORY	REV: v1
		SCALE:	SHEET: 8 OF 14

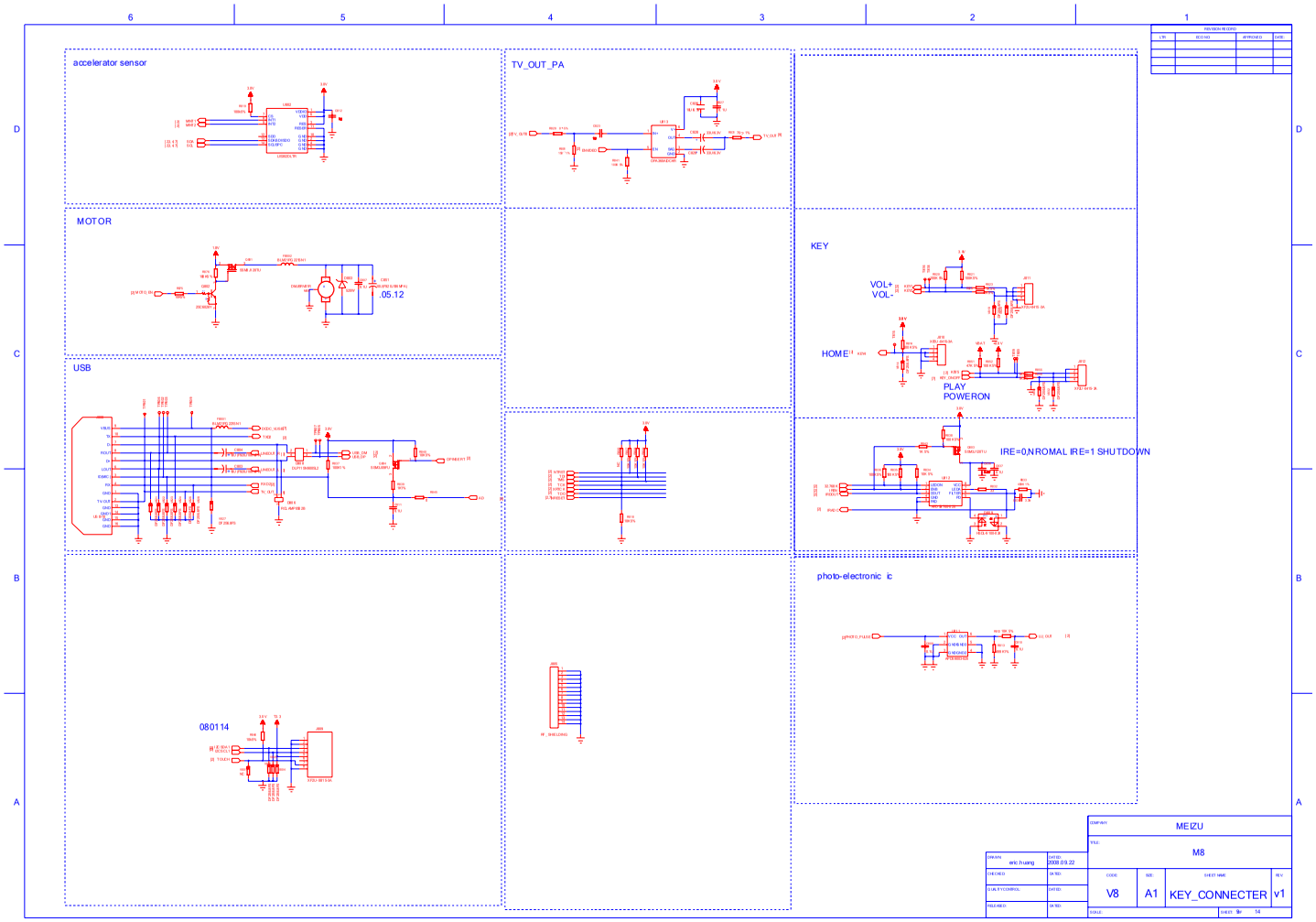
accelerator sensor
TV_OUT_PA
MOTOR
.05.12
KEY
VOL+
VOL-
HOME
PLAY
POWERON
IRE=0,NROMAL IRE=1 SHUTDOWN
USB
photo-electronic ic
080114
MEIZU
M8
V8
A1
KEY_CONNECTER
v1
eric.huang
2008.09.22

REVISION RECORD			
LTR	ECO NO.	APPROVED	DATE

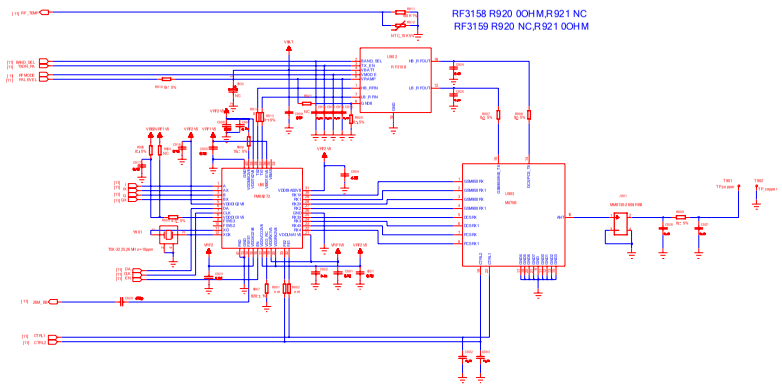

DRAWN: eric.huang	DATE: 2008.09.22	COMPANY: MEIZU	
CHECKED:	DATE:	TITLE: M8	
QUALITY CONTROL:	DATE:	CODE: V8 / SIZE: A1 / SHEET NAME: RF	REV: v1
TITLE AREA:	DATE:	SCALE:	SHEET 8 OF 14

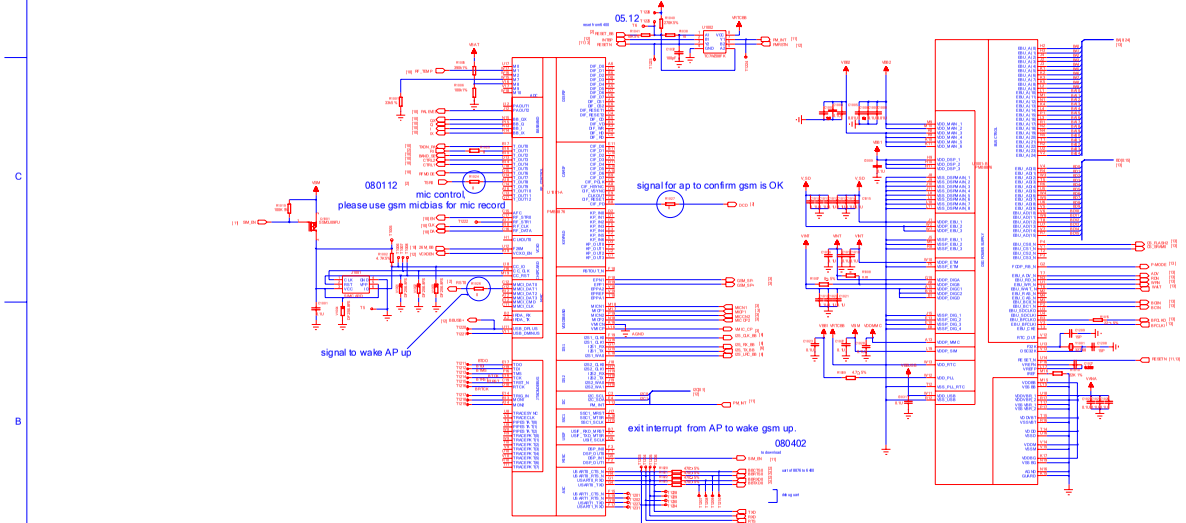

REVISION RECORD			
LTR	ECO NO	APPROVED	DATE

COMPANY: MEIZU			
TITLE: M8			
CODE: V8	SIZE: A1	SHEET NAME: GSM_BASEBAND	REV: v1
SCALE:		SHEET 8 OF 18	

DRAWN: eric.huang	DATE: 2008.09.22		
CHECKED:	DATE:		
QUALITY CONTROL:	DATE:		
ISSUE AGED:	DATE:		

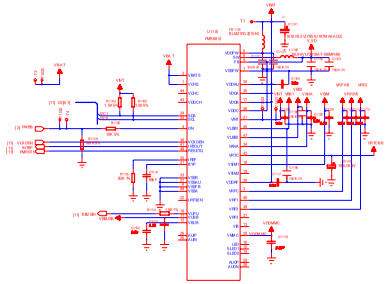

OUTPUT	VOLTAGE
V_SD	1.8V
VBB1	1.5V
VBB2	1.5V
VANA	2.65V
VINT	2.72V
VSIM	2.85V
VSIM2	2.85V
VMMC	2.85V
VUSB	3.1V
VRTC	2.11V
VRF1V5	1.5V
VRF1	2.7V
VRF2V5	2.85V
VRF2	2.7V

REVISION RECORD			
LTR	ECO NO.	APPROVED	DATE

COMPANY: MEIZU			
TITLE: M8			
DRAWN: eric.huang	DATE: 2008.09.22		
CHECKED:	DATE:		
QUALITY CONTROL:	DATE:		
RELEASED:	DATE:		
CODE: V8	SIZE: A1	SHEET NAME: GSM_POWER	REV: v1
SCALE:	SHEET 32 OF 48		

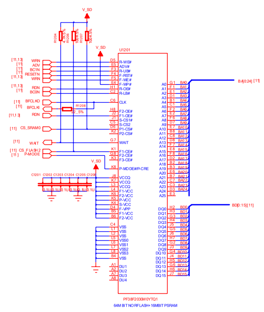

DRAWN: eric.huang	DATED: 2008.09.22	COMPANY: MEIZU				
CHECKED:	DATED:	TITLE: M8				
QUALITY CONTROL:	DATED:	CODE: V8	SIZE: A1	SHEET NAME: GSM_MEMORY		REV: v1
RELEASED:	DATED:	SCALE:			SHEET: 13	14

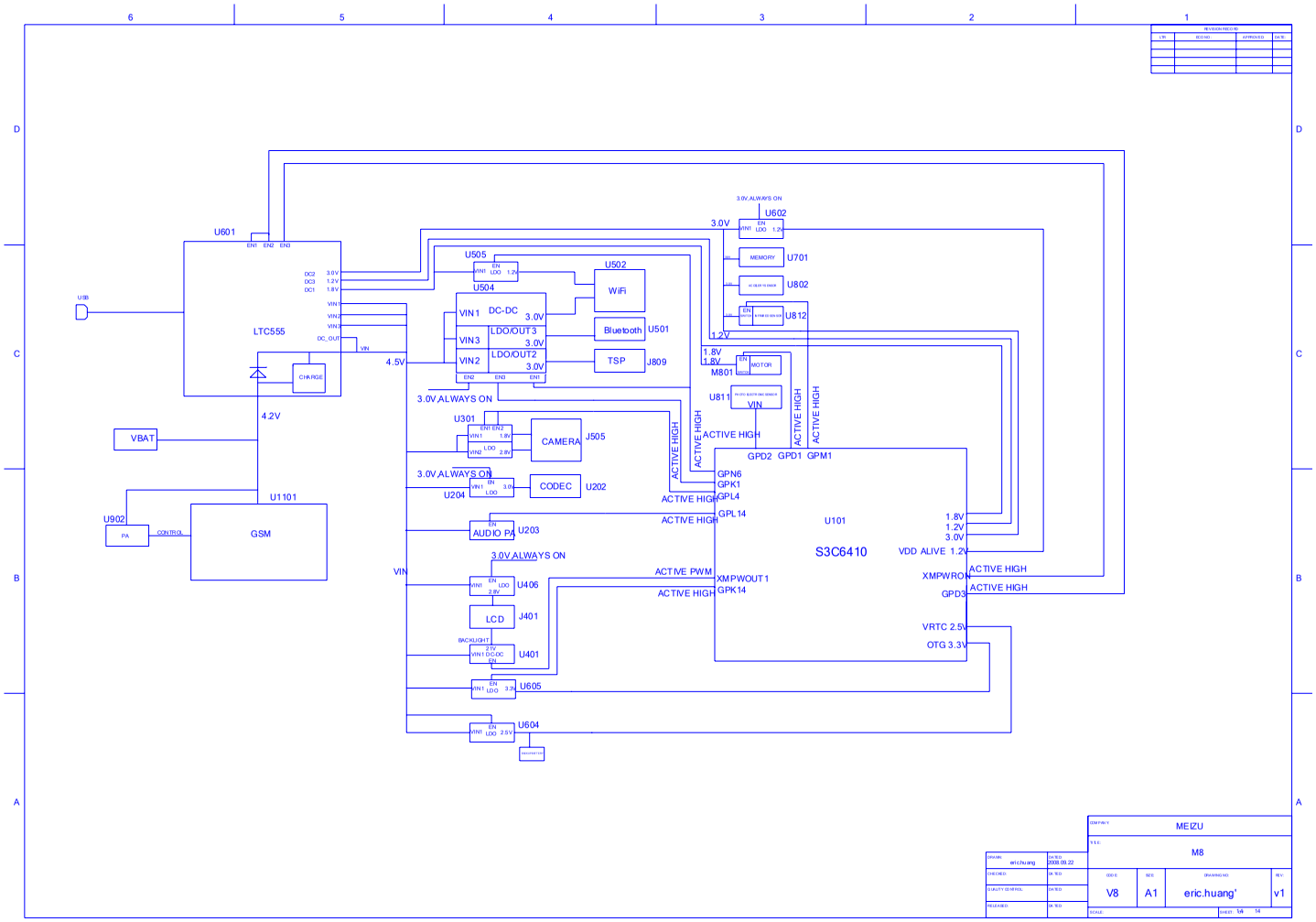

REVISION RECORD			
LTR	REVISED	APPROVED	DATE

COMPANY	MEIZU		
TITLE	M8		
CODE	SIZE	DRAWING NO.	REV
V8	A1	eric.huang'	v1
SCALE		SHEET 1of 1	

DRAWN	eric.huang	DATED	2008.09.22
CHECKED		DATED	
QUALITY CONTROL		DATED	
RELEASED		DATED	