SITE TECHNICAL DOCUMENTATION

myX-7/ myV-75

Doc. No. :	**SCT U38 SSC DTS 0017**
Version :	**A**
Date :	**February 02 , 2004**

Produced by ***SAGEM SA***
2, rue du Petit Albi, 95800 Cergy Saint-Christophe, France
Tel (33) 1 30 73 50 50 - Fax (33) 1 30 73 50 55


SAGEM
my X-7


SAGEM
my V-75
vodafone

NO DISCLOSURE AGREEMENT

CONTENTS

CHAPTER 7 – TECHNICAL INFORMATION BULLETIN

CHAPTER 8 – ILLUSTRATED PARTS CATALOG

APPENDIX 1 – COMPOSITION TABLE

CHAPTER 1 - FOREWORD

This document is common to all myX-7/ myV-75 phones in the SAGEM. It is composed of independent sheets:

- Symptom sheets = Symp Sheet XX
- Test and check sheet = Test Sheet XX
- Maintenance procedure sheet = Proc Sheet X XX

The applicability of a procedure is indicated in the independent sheets title block.

These sheets are updated from time to time in Technical Information Bulletins (TIB).

The information contained in this document is non-contractual, since phone characteristics can change.

Phones are managed based on *SAGEM* handset codes; any order for spare parts must refer to these codes (typical code 25 xxx xxx-x).

1.1 HOW TO USE THE SITE TECHNICAL DOCUMENTATION

This is a modular document. Each sheet is single and independent. In some cases several sheets may have to be used in order to determine the complete procedure to be applied.

A troubleshooting chapter (chapter 3) is provided and is sorted according to the type of reported fault, to determine the maintenance procedure to be carried out.

These sheets describe the procedure to be followed. They refer to test sheets or removal and replacement maintenance sheets. Maintenance ,executed by the repair center, terminates either by returning the product to the customer, or by dispatching it to level 3 maintenance (return to factory).

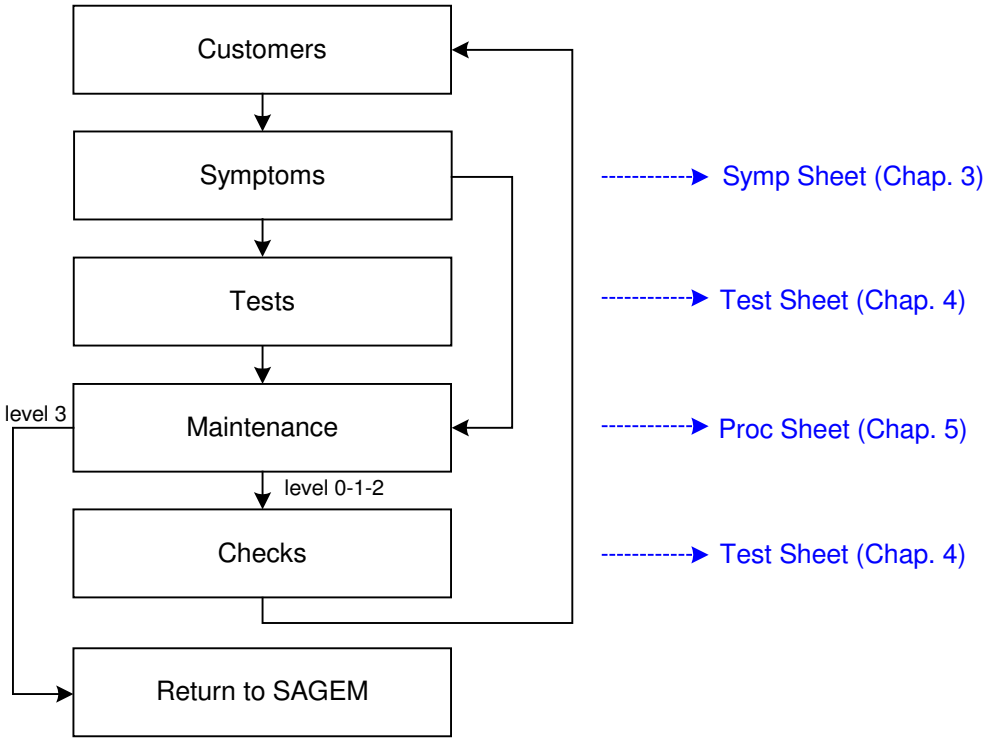

All sheets include illustrations to make it easier to read the procedure.

- **Chapter 1: Foreword**, describes general data about this document.
- **Chapter 2: Description - Operation**, describes general data and options available in the myX-7/ myV-75.
- **Chapter 3: Symptoms**, contains troubleshooting procedures to be carried out on equipment.
- **Chapter 4: Tests and checks,** contains tests and check procedures to be performed on the equipment.
- **Chapter 5: Maintenance procedures**, contains level 0 to 2 maintenance procedures to be carried out on the equipment, and the procedure to return to SAGEM level 3.
- **Chapter 6: Accessories**, describes the characteristics of accessories for myX-7/ myV-75 phones.
- **Chapter 7: Technical Information Bulletins**, contains the various modifications made to this documentation.
- **Chapter 8: Illustrated Parts Catalogue**, contains the various reference for spare parts.
- **Appendix 1**: **Composition table**, contains the various Sagem references codes for equipment described in this document.

1.2 ABREVIATIONS

AAC	Advanced Audio Coder
ADPCM	Adaptive Differential Pulse Codec Modulation
ALS	Alternative Line Services
AOC	Advice Of Charge
CCD	Charged Coupled Device
CLI	Calling Line Identification
CLIP	Calling Line Identification Presentation
CSTN	Colored Super Twisted Nematic
DCS	Digital Cellular System
EFR	Enhanced Full Rate
EMS	Enhanced Message Service
FDN	Fix Dial Number
GPRS	General Packet Radio Service
GSM	Global System for Mobile
IMEI	International Mobile Equipment Identity
ISO	International Standard Organisation
LCD	Liquid Crystal Display
LU	Livret d'Utilisation (User's guide)
MMS	Multimedia Message Service
SMT	Outil de Maintenance des Mobiles (Mobile Maintenance Tools)
PIN	Personal Identity Number
PUK	PIN Unlocking Key
RF	Radio Frequency

SAR	Specific Absortion Rate
SIM	Subscriber Identify Module
SMS	Short Message Service
SMS CB	Short Service Message Cell Broadcast
TFT	Thin Film Transistors
USSD	Unstructured Supplementary Service Data
VGA	Video Graphics Array
WAP	Wireless Application Protocol
WiFi	Wireless Fidelity
WSP	Wireless Session Protocol

1.3 COMMENTS SHEET

Broad experience is very beneficial in several respects. Please let us know your comments so that we can improve the contents and presentation of this document.

Your suggestions will be read carefully by :

- the design laboratory,
- production,
- the purchasing department,
- the after sales service,
- all users of this document.

All your suggestions are valuable, they will help us to better satisfy you.

Please photocopy and fill in the sheet 1-4.

Document title: **Site Technical Document for myX-7/ myV-75**

Reference :

Date : February 2004

Please fill in the following table :

	Excellent	Good	Fairly good	Passable
Easy to find the required information				
Clarity of information provided				
Quality and accuracy of information given				
Document outline				
Document presentation and appearance				
Quality of illustrations				
General satisfaction				

Do you think this document could be improved ? if so, how ? :

- ☐ Improve the overall view
- ☐ Improve the table of contents
- ☐ Improve the structure
- ☐ Add illustrations
- ☐ Add details
- ☐ Add information

Comments : _____
_____
_____

Would you like to discuss the problems mentioned in this questionnaire? If so, state :

Name of the person to be contacted : _____ Phone : _____

Company : _____ Date : _____

Address : _____

THANK YOU FOR PARTICIPATING IN THIS ENQUIRY. YOUR COMMENTS WILL HELP US CONTINUE TO IMPROVE THE QUALITY OF OUR DOCUMENTATION AND THUS BETTER SATISFY YOUR NEEDS.

When you have filled in this questionnaire, please send it :

- by fax, to +33 (0) 1 40 70 84 06
- by mail, to **SAGEM S.A.**
  Support Service Client / URD 38
  2 rue du petit Albi
  BP 8250
  95 801 Cergy Saint-Christophe

CHAPTER 2 - DESCRIPTION - OPERATION

2.1 REMINDERS ABOUT THE GENERAL CHARACTERISTICS OF GSM 900, DCS 1800 AND PCS (GSM 1900) NETWORKS

Table 1 below gives the characteristics of the radio interface for the GSM 900, DCS 1800 and PCS 1900 systems :

	GSM 900	**DCS 1800**	**PCS 1900**
Frequency Band (MHz)	880 - 915 925 - 960	1710 - 1785 1805 - 1880	1850 - 1910 1930 - 1990
Number of time intervals per TDMA frame	8		
Width 2 x W simplex (MHz)	2 x 25	2 x 75	2 x 60
Duplex spacing (MHz)	45	95	80
Modulation speed (kbit/s)	271		
Speech throughput (kbit/s)	13 (5,6)		
Maximum data throughput (kbit/s)	12		
Multiple access	Frequency and temporal multiplexing / frequency duplexing		
Cell radius (km)	0,3 to 30	0,1 to 4	0,1 to 4
SAGEM terminal power (W)	2	1	1

Table 1 : Radio Interface

Table 2 shows powers as a function of the network:

	GSM 900		**DCS 1800**		**PCS 1900**	
Class number	Maximum nominal power (W)	Allowable interval (W)	Maximum nominal power (W)	Allowable interval (W)	Maximum nominal power (W)	Allowable interval (W)
1	-	-	1	[0,63 ; 1,6]	1	
2	8	[5,0 ; 12,7]	0,25	[0,16 ; 0,4]	0,25	
3	5	[3,2 ; 7,9]	4	[2,5 ; 6,3]	2	
4	2	[1,3 ; 3,2]				
5	0,8	[0,5 ; 1,3]				

Table 2: Terminals power class

Table 3 shows power classes :

	Class 1	Class 2	Class 3	Class 4	Class 5
900	43 dBm	39 dBm	37 dBm	33 dBm	29 dBm
1800	30 dBm	24 dBm	36 dBm	-	-
1900	30 dBm	24 dBm	33 dBm	-	-

Table 3: RF power classes

2.2 REMINDERS ABOUT THE CHARACTERISTICS AND OPTIONS OF myX-7/ myV-75

GENERAL CHARACTERISTIC	*myX-7/ myV-75*
Dimensions (in mm) / Volume (in cc)	110x46x22
Weight (in g)	106g
Standby / Talk time (h/mn) - (TW09) - (screensaver off)	up to 310h / up to 4h40
Screen technology	TFT
Screen size (pixels/mm)	128x160 / AA 31.87 x 39.84 -VA 34.5x41.84
Number of colors	65k
Camera	x, built-in
Camera technology & resolution	CCD / VGA

MEMORIES CAPACITY	
Phone book direct access key	x
Last call numbers (how many)	x, 20
Internal phone book memory (size)	x, (TBD)

COMFORT	
Calculator	x
Alarm clock	x
Chronometer	-, Timer
Currency convertor (euro & others)	x
Automatic hang up	x
Any key answer	x
Languages (number)	8
Ringtones (number)	30 default set + mass storage for downloaded content (total amount to be defined)
Call personalisation	x
Automatic redial	x
International access key	x
Secret key	-, through menu
Direct access key	x
Scroll key	-

STANDARDS & ADVANCED FUNCTIONS	***myX-7/ myV-75***
WAP (1.1, 1.2.1or 2.0)	2.0
WAP Protocol	WTP
WAP Provisioning	x
GPRS and type (2+1 / 3+1….)	Class 10
JAVA	CLDC1.0,MIDP2.0,WMA
Sim Toolkit (release 99)	x
Multiband	900/1800/1900
Vibrating device	x
Voice dialing	-
Voice commands	-
Voice memo	x, (mass storage total amount TBD)
Integrated handsfree with loudspeaker	x
Predictive editor -Intuitive or predictive ?	x, T9 engine (Predictive)
Emission & Reception of contents SMS (EMS or smart messages..)	x, EMS R5, MMS R4
Chat	-
PIM functions (vCard)	x
Agenda (vCalendar)	-
ToDo (number)	x, (mass storage total amount TBD)
vCard exchange over Irda (OBEX)	x
DATA / FAX applications	x
Built-in modem	x
IRDA	x
Direct access keys (ADN / SMS / WAP)	x
SMS notification	x
PC directory synchronization	x
Bluetooth (integrated / add-on)	-
Integrated games	x
Music reproduction codecs : MP3 , AAC , others	PCM, ADPCM, Midi (8 tones- quality improved compared to myX6)
FM radio	-
Calling line identification (Cli)	x
GSM voice Codec	HR, EFR, FR
OTA DOWNLOADING	
Pictures, icones, monophonic ringtones	EMS, MMS, WTP
Polyphonic and HiFi ringtones, Music	EMS, MMS, WTP
Games	Java MIDI2.0 through HTTP Gel
Music download : size of files, solutions	MMS, WTP

2.3 DATA/ AUDIO/ CHARGE CONNECTOR

2.3.1 Connector description

This connector is located at the bottom of the transmission module and enables the connection to various accessories. It comprises power supply pins and signals.

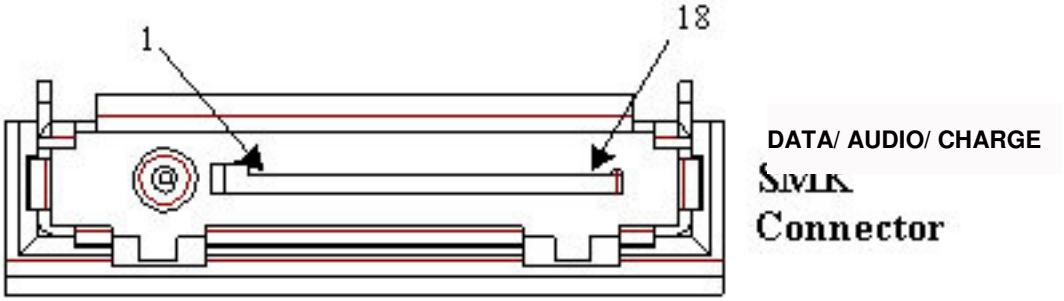

2.3.2 Signal description

SYMBOL	PIN CONNECTOR No.	SIGNAL FUNCTION	NATURE E/S, AI, Ana
CHARGEUR	1	Phone set power ON and power supply signal.	POWER SUPPLY
VBAT	2	POWER SUPPLY IMAGE VOLTAGE, connect this signal to «CHARGER» (pin n°1) to switch the module on.	POWER SUPPLY OUTPUT
ON*	3	SIGNAL RESERVED FOR USE BY SAGEM (car handsfree kit).	OPEN DRAIN OUTPUT
VPP	4	Flash programming voltage	POWER SUPPLY
SDAI2C	5	DATA SIGNAL RESERVED FOR SAGEM SPECIFIC ACCESSORIES.	LOGICAL INPUT/OUTPUT
GND	6	ZERO VOLT	SIGNAL GROUND
SCLI2C	7	CLOCK SIGNAL RESERVED FOR SAGEM SPECIFIC ACCESSORIES.	OPEN DRAIN INPUT/OUTPUT
INTI2C	8	INTERRUPT SIGNAL RESERVED FOR SAGEM SPECIFIC ACCESSORIES.	LOGICAL INPUT

POLANT32 (RXD2)	9	APPLICATION INPUT SERIAL N°2	LOGICAL INPUT
RXDG	10	SERIAL DATA TO BE TRANSMITTED.	LOGICAL INPUT
TXDG	11	SERIAL DATA RECEIVED.	LOGICAL OUTPUT

SYMBOL	PIN CONNECTOR No.	SIGNAL FUNCTION	NATURE E/S, AI; Ana
DIN32	12	RESET	LOGICAL INPUT
ITDATA	13	Interruption signal keep for SAGEM accessories.	LOGICAL INPUT
GND	14	ZERO VOLT.	SIGNAL GROUND
BFRXP	15	Audio frequency signal received (ϕ 0).	ANALOG OUTPUT
BFRXN	16	Complementary output to BFRXP (ϕ 180).	ANALOG OUTPUT
BFTXN	17	AUDIO FREQUENCY SIGNAL TO BE TRANSMITTED ϕ 180. Complementary input to BFTXP.	ANALOG INPUT
BFTXP	18	AUDIO FREQUENCY SIGNAL TO BE TRANSMITTED ϕ 0. Acoustic L.F. signal to be transmitted.	ANALOG INPUT

2.4 IDENTIFICATION

All phones are identified with an identification label sticked on the antenna.

2.4.1 Illustration

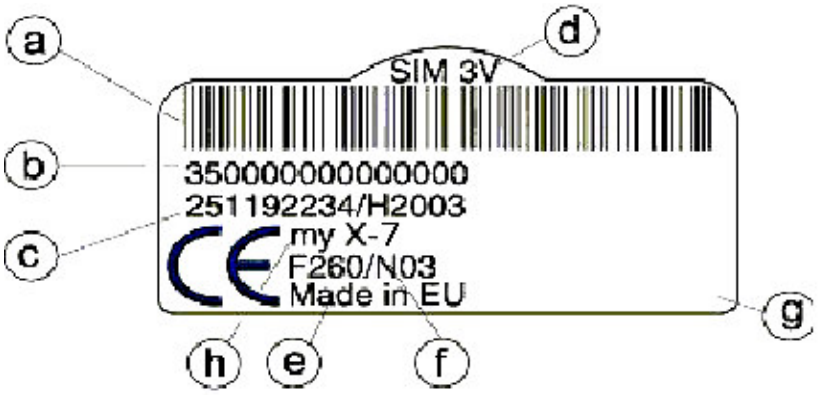

2.4.2 Description

a : IMEI (bar code),

b : IMEI (15 characters)

c : Reference of product / aesthetic used .

d : Sim card Indication (Sim 3V…),

e : Production area Indication,

f : Production date (date code) + Production level,

Ex. F260/03 = (F) fabrication area (F : Fougères), (260) day of year, (03) last digit of year (03→2003).

g : Logo and agreement.

h : Product designation

2.4.3 Description after repair

<u>A new sticker is positioning by Repairing Centre on the antenna</u>:

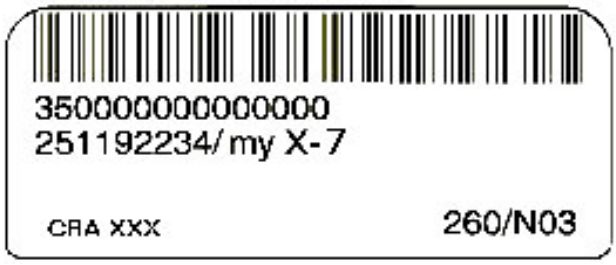

This extra line will appear if the mobile has already been repaired.

- **CRA XXX** ⇒ N° of CRA,
- **260/03** ⇒ Date of repair (260), repairing day (03), last digit of year (03→2003).

2.5 PHONE BLOCK DIAGRAM

2.5.1 myX-7/ myV-75 block diagram

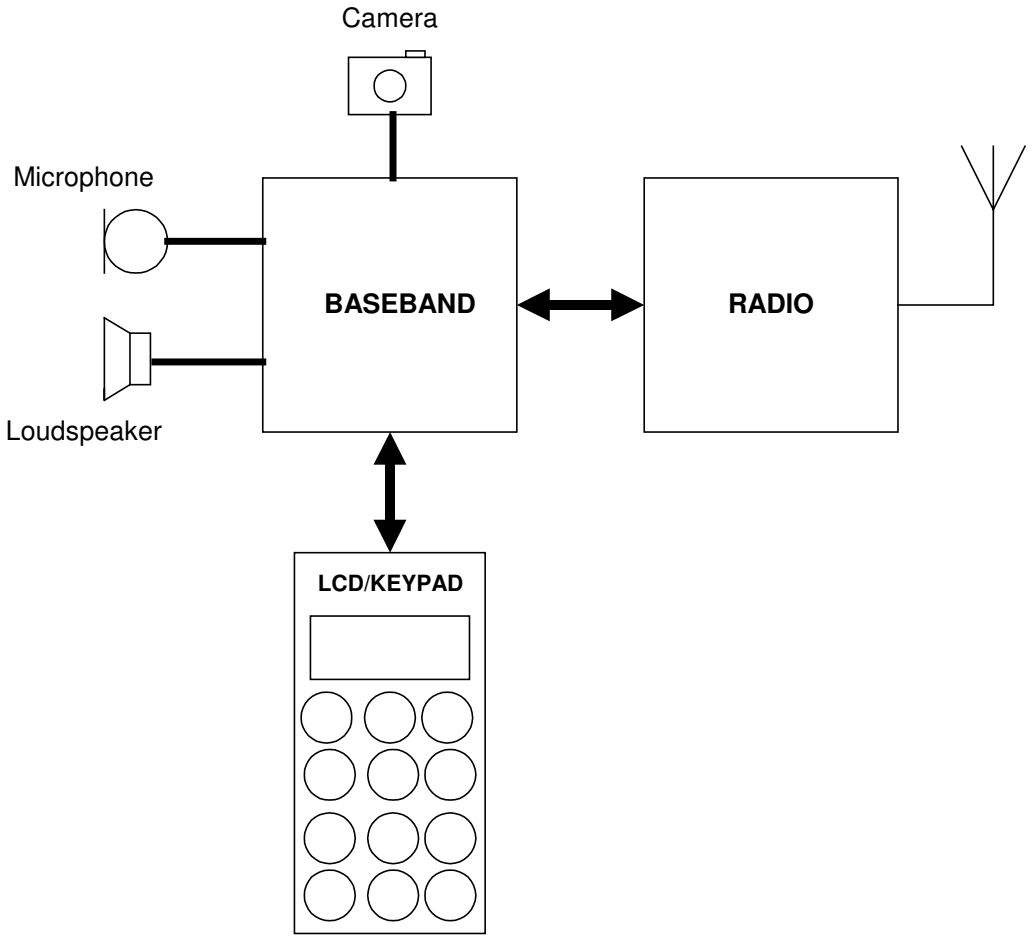

2.5.2 Standards and environment

The phone complies with the following standards.

Directive EEC	1999 / 5 / CE
Safety (security)	EN 60950
CEM	EN 301 489-1 / EN 301 489-7
Voltage	73 / 23 / EEC
Network	3GPP TS 51.010-1 v 5.2.0 with included GCF-CC V 3.10.0
	Requirements GT01 v 4.7.0 / TBR 19 edition 5 / TBR 20 edition 3
	TBR 31 edition 2 / TBR 32 edition 2 / EN 301 419-1 / EN 301511
Health	EN 50360 / EN 50361

2.6 EQUIPEMENTS

The description and operation of SAGEM myX-7/ myV-75 are given in the "User's handbook" supplied with the handset. This chapter only describes equipment that operates with the myX-7/ myV-75 handset.

2.6.1 Battery packs

2.6.1.1 Characteristics

Type	Technology	Weight	Voltage capacity
L1000	Li-Ion	24 g	3,6 V / 1000 mA/H

2.6.1.2 Description

Li-ion type batteries are used. They are rechargeable using:

- mains power supply modules,
- 12 V / 24 V, cigar lighter chargers,
- car hands free kits (compact and comfort),
- Power supply data.

Batteries caution use:

- Store the batteries in a dry and cool place (excessive cold and heat damage the batteries reliability).
- They must never be stored in bulk, even the rejects, to avoid any short circuits.
- Do not dismantle the battery packs. (Li-Ion regulations).
- Only use original mains power supply module.

2.6.1.3 Charging time

The following table shows typical charging times for different batteries.

Battery	500 mA travel chargers	AC* and K** chargers	"Simple" unregulated chargers 230 V Nom. (110 V Nom.)	
	94 V to 254 V		230 V (110 V)	254 V (121 V)
L1000	3h30	3 h	3h45	3h20

* : cigar lighter chargers (12 V et 24 V)

** : car hands free kits (Values screen off).

2.6.2 Mains modules

2.6.2.1 Description

These mains power supply modules accept large dynamic variations in the power supply network. They are available for a number of connector types:

- E.E.C,
- United Kingdom
- United States,
- Australia.

2.6.2.2 Travel mains modules

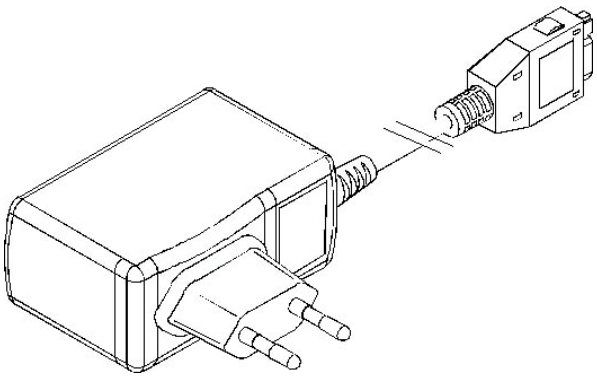

Designation	Weight (g)	Vol (cm^3)	Primary voltage
UNREGULATED TRAVEL MAINS POWER SUPPLY MODULES 6.5 V. 500 mA.			
TRAVEL 500 mA. EC	100	75	110/230 V
TRAVEL 500 mA. UK	110	90	110/230 V
TRAVEL 500 mA. US	125	65	110/230 V

TRAVEL 500 mA. AUS	100	75	110/230 V

2.6.2.3 Mains modules

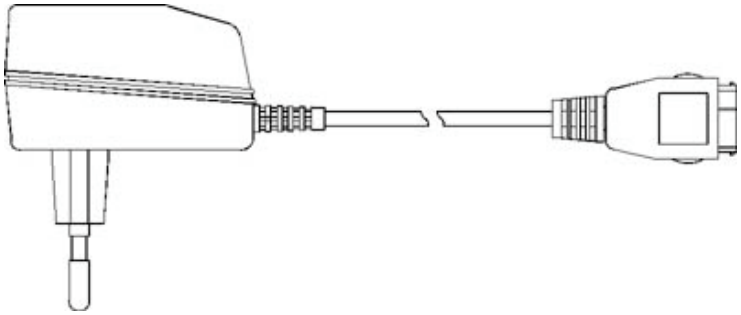

Reference	Weight (g)	Vol (cm^3)	Primary voltage
SIMPLE UNREGULATED MAINS POWER SUPPLY MODULES 1.5 VA. 12V. 300 mA.			
EC MAINS MODULE	180	85	230 V
UK MAINS MODULE	180	120	230 V
US MAINS MODULE	210	105	110 V
AUS MAINS MODULE	190	105	230 V

CHAPTER 3 - SYMPTOMS

3.1 GENERAL

After you have received the **customer return sheet** (Proc Sheet 3 02), carry out the troubleshooting procedure.

This chapter will help you to identify the defective element(s), using the troubleshooting table.

It contains flow charts broken down by fault type. Each flow chart describes the procedure to be followed and contains cross references to tests or maintenance.

The conclusion of each troubleshooting procedure is :

- Return to SAGEM =The Return to the SAGEM centre can concern either the card, or the radiotelephone according to instructions given to the Centres of repair.
- Delivery to the customer

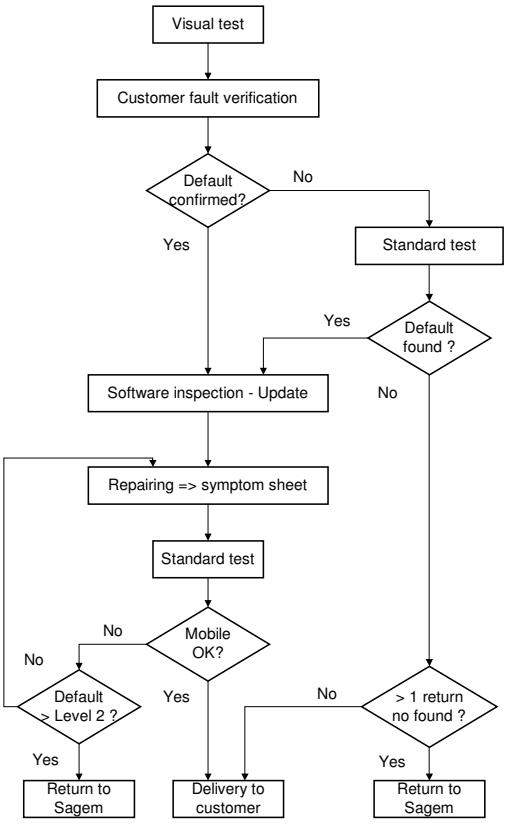

Visual test :

- Glass state
- Keypad state (elastomer, inscription)
- Connector state (DATA/ AUDIO/ CHARGE, battery, SIM)
- Plug and position of battery
- SIM card position
- Oxidation

Standard test :

- Display test : Hot Line menu
- Contrast control
- Photo function test
- Video function test
- MMS and GPRS test
- All keypad keys test (check bips keys)
- Audio and radio test
- Battery charge test
- Consumption of mobile in off state
- Vibrating device test : Hot Line menu
- Charger test
- Real call with a operator SIM card

These flow charts should be followed in full. After a reference to a removal/replacement sheet or to a test to be carried out, you should return to the initial flow chart and continue the search until reaching a final conclusion.

3.2 LIST OF REPORTED DEFECTS

The following is a list of defects that may be reported :

Code	Indicated fault	Procedure
A1	No power up	Symp Sheet 01
A2	No display up	Symp Sheet 04
A3	Freezes up	Test Sheet 01
A5	Broken LCD	Symp Sheet 04
A6	Line or digit missing	Symp Sheet 04
A7	Backlights problem	Proc Sheet 1 12 or 3 01
A10	Broken / Missing antenna	Proc Sheet 1 12 or 3 01
B1	Defective battery contact	Proc Sheet 0 02
B2	Defective mobile charger connector	Proc Sheet 1 12 or 3 01
B3	Defective power supply of the board	Proc Sheet 1 12 or 3 01
B4	Defective charge icon display	Proc Sheet 1 12 or 3 01
B5	Current consumption with phone off	Test Sheet 04
B7	Autonomy	Symp Sheet 01
B8	Electrically defective battery	Test Sheet 03
B9	Mechanical lock problem on battery	Proc Sheet 02
B10	Broken battery	Test Sheet 03
B11	Defective charger	Test Sheet 02
B12	Broken charger	Test Sheet 02
B13	Intermittent switch off with reboot	Proc Sheet 1 12 or 3 01
B14	Intermittent switch off without reboot	Proc Sheet 1 12 or 3 01
C1	Not functioning keyboard	Symp Sheet 05
C2	Lateral key problem	Symp Sheet 05
D1	Sim missing	Proc Sheet 1 12 or 3 01
D2	Other messages	Proc Sheet 1 12 or 3 01
D3	EEPROM problem	Proc Sheet 1 12 or 3 01
D4	Untuned mobile	Proc Sheet 1 12 or 3 01
D5	Hard failure	Proc Sheet 1 11 or 3 01
D6	Sim verrou	Proc Sheet 1 12 or 3 01
D7	Post code blocked	Test Sheet 01
D8	SAV return	Proc Sheet 1 12 or 3 01

D9	Unknown battery	Test Sheet 03

Code	***Indicated fault***	***Procedure***
E1	Defective loudspeaker (hails)	Symp Sheet 08
E2	Loudspeaker voice distortion	Symp Sheet 08
E3	Defective microphone	Symp Sheet 08
E4	Microphone voice distortion	Symp Sheet 08
E5	Vibrating device problem	Symp Sheet 07
E6	Defective audio connector	Symp Sheet 08
F1	No network retrieval	Symp Sheet 02
F2	Intermittent calls drop	Symp Sheet 02
F4	Test radio no ok	Proc Sheet 1 12 or 3 01
F5	Outgoing call failure	Symp Sheet 02
F6	Incoming call failure	Symp Sheet 02
F7	Network temporary drop	Symp Sheet 02
G1	Broken or damaged glass	Proc Sheet 0 03
G2	Broken or damaged cover	Proc Sheet 0 01 /0 03
G3	Broken or damaged flip	Not applicable for myX-7/ myV-75
G5	Broken or damaged keyboard	Proc Sheet 0 04
G6	Defective lock button	Proc Sheet 0 05
H1	Broken or damaged accessory	Proc Sheet 1 12 or 3 01
H2	FM function	Proc Sheet 1 12 or 3 01
H3	Monetic function	Proc Sheet 1 12 or 3 01
I1	Oxidation marks	Proc Sheet 1 12 or 3 01
I3	No fault found	Symp sheet 03
I5	Lack function in the menu	Test sheet 01
I6	Defective SIM connector	Proc Sheet 1 12 or 3 01
I7	Malfunction of the menu	Test sheet 01
I8	Mobile retrofit	Test sheet 01
K1	DATA PROBLEM (SMS, EMS, SMS,GPRS, WAP, DOWNLOADING GAMES, RINGING TONES, SCREEN SAVER, NO COMMUNICATION WITH A PC, POCKET PC or PALM)	Test sheet 01
K2	Video function	Test sheet 07 / Test sheet 08
K3	INFRARED function (IRDA)	Test sheet 01

3.3 ERROR MESSAGES DURING START UP

Message	Meaning	Procedure
WARNING UNTUNED RADIO	Invalid EEPROM field (SAGEM)	SAGEM Factory Return
PB IMEI	Consistency problem at IMEI level	SAGEM Factory Return
SIM MISSING	SIM card missing or badly inserted	Insert the SIM card
IMEI ERROR	Consistency problem at IMEI level	SAGEM Factory Return
UNTUNED	Mobile not configured	SAGEM Factory Return
UNKNOWN BATTERY	Battery not recognised by the mobile	Replace the battery
MOBILE PHONE LOCKED	Number of seizures of sim locked code exceeded	SAGEM Factory Return Not repair under warranty
SIM BLOCKED	Three bad PIN codes have been input	Contact the operator
SIM LOCKED (with SIM)	SIM card not adapted to the operator	Replace the SIM card
SIM LOCKED (without SIM)	Attempt of corruption (EEPROM fields)	SAGEM Factory Return Not repair under warranty
BATTERY TOO LOW	Battery state	Replace the battery

Note:* SAGEM factory return *can concern either the card, or the mobile, according to instructions given to the CRAs.

3.4 OTHER ERROR MESSAGES

Message	Meaning
"BUSY"	"Problems" related to the network and Communications
"K.PAD LOCKED PRESS *V"	Keypad locked
"OPTION NOT AVAILABLE"	Menu not available for this product version
"PROG.KEY NOT VALID"	Input "Problems"
"ERROR!!"	Calculation error with the calculator (division by zero)
"NOT REACHABLE"	Call forwarding if the mobile is not reachable
"NOT AVAIL."	Not available
"PIN ERROR"	" PIN input problems "
"PIN2 BLOCKED"	Following input errors
"PUK ERROR"	Following input errors
"PUK2 BLOCKED"	Following input errors
"CODE ERROR"	The phone code input for locking the mobile is incorrect
"NOT AVAIL."	Service not implemented in the network

"TRY AGAIN"	Following a network problem
Message	***Meaning***
"NETWORK BUSY"	"Problems" related to the network and Communications
"WAIT"	"Problems" related to the network and Communications
"UNBLOCK?"	"Problems" related to the SIM card
"MEMO REC. CUT"	Save during storage in the answering machine truncated due to lack of space
"FUNCTION NOT ALLOWED"	Prohibited function requested
"NOT FOUND"	Unsuccessful search (on directory, etc.)
"BUSY"	"Problems" related to the network and Communications
"REJECTED"	The requested operation was refused by the network
"EMPTY"	Empty (note pad, memo, etc.)
"NOT IN GROUP"	Error display following an error code returned from the network (CUG menus)
"CREDIT END"	“Credit end” information (paying call prohibited)
"CREDIT TOO LOW"	“Credit too low” information (CUG menus)
"NO AUTHORIZED ACTION DURING A WAP CALL"	Not available action during a wap call
"NOT CONFIGURED ACCESS"	Selection of a not configured provider
"UNKNOWN ACCESS"	Selection of a not fully configured provider
"UNKNOWN CALL IN PROGRESS"	Selection of a provider during a call in progress
"NO RESPONSE OF THE SERVER"	" Problems" related to the server
" NO RESPONSE OF THE NETWORK"	"Problems" related to the network and Communications
"NOT AVAILABLE NETWORK"	"Problems" related to the network and Communications
"TOO LONG URL ADDRESS"	The address typed is too long

3.5 LIST OF OBSERVED DEFECTS

A SAGEM code is assigned to each confirmed defect. This code should be entered on **Proc Sheet 3 01**, **SAGEM Factory Return**, if the phone to be repaired is returned to SAGEM **(see chapter 5).**

SYMPTOM SHEETS

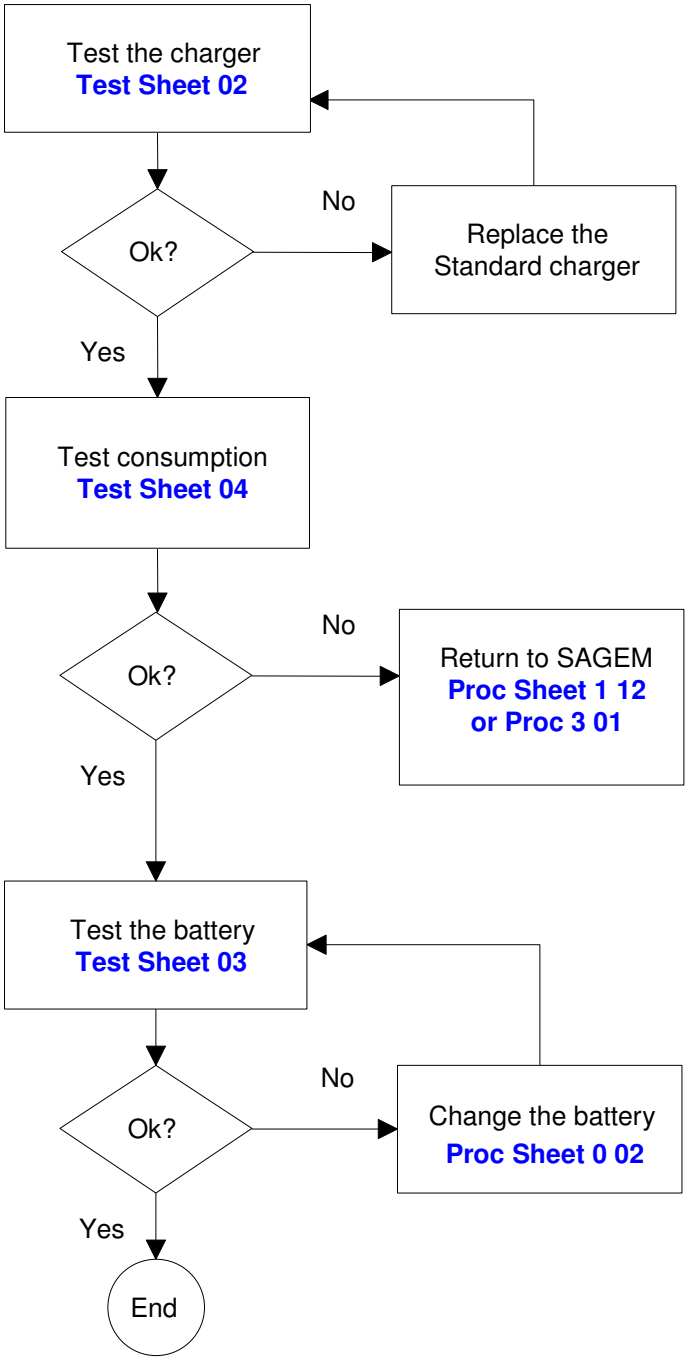
Test the charger
Test Sheet 02
Ok?
No
Replace the Standard charger
Yes
Test consumption
Test Sheet 04
Ok?
No
Return to SAGEM
Proc Sheet 1 12
or Proc 3 01
Yes
Test the battery
Test Sheet 03
Ok?
No
Change the battery
Proc Sheet 0 02
Yes
End

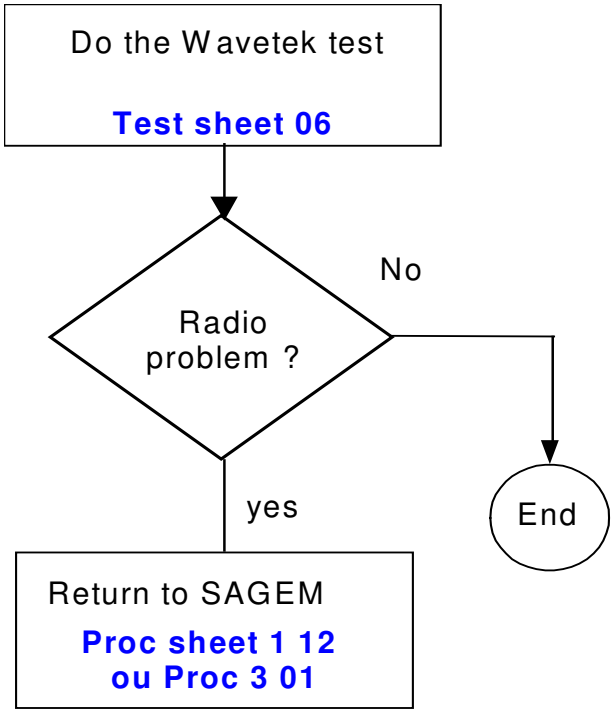
Do the Wavetek test
Test sheet 06
Radio problem ?
No
End
yes
Return to SAGEM
Proc sheet 1 12
ou Proc 3 01

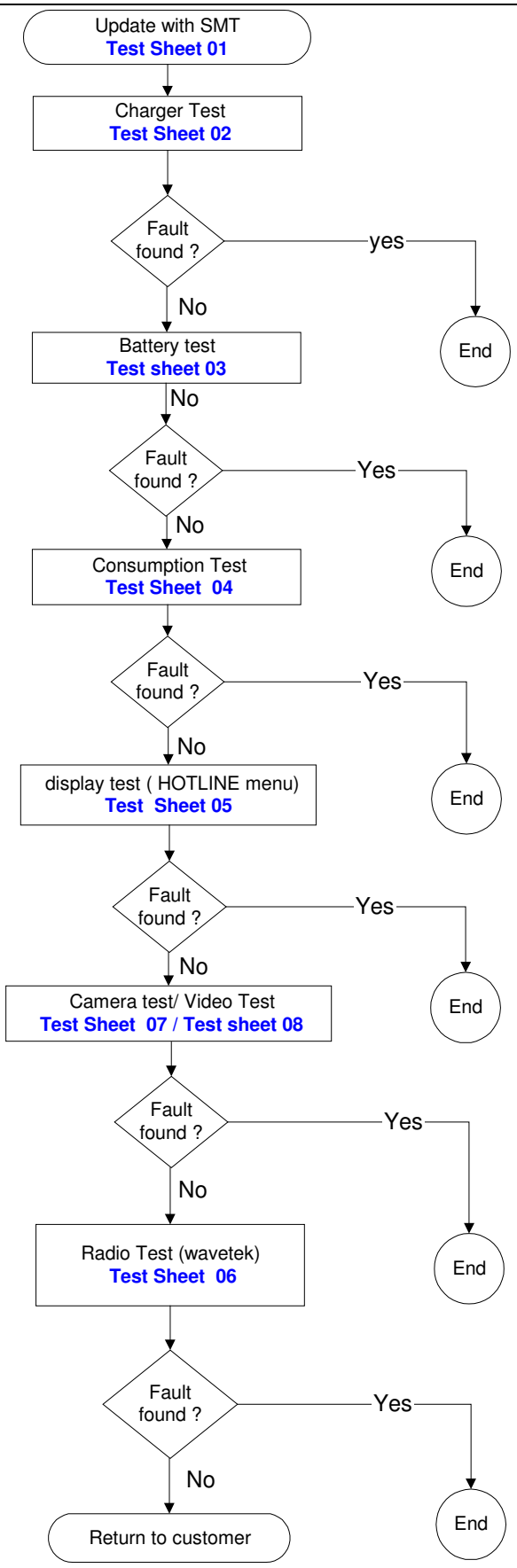
Update with SMT
Test Sheet 01
Charger Test
Test Sheet 02
Fault found ?
yes
End
No
Battery test
Test sheet 03
No
Fault found ?
Yes
End
No
Consumption Test
Test Sheet 04
Fault found ?
Yes
End
No
display test (HOTLINE menu)
Test Sheet 05
Fault found ?
Yes
End
No
Camera test/ Video Test
Test Sheet 07 / Test sheet 08
Fault found ?
Yes
End
No
Radio Test (wavetek)
Test Sheet 06
Fault found ?
Yes
End
No
Return to customer

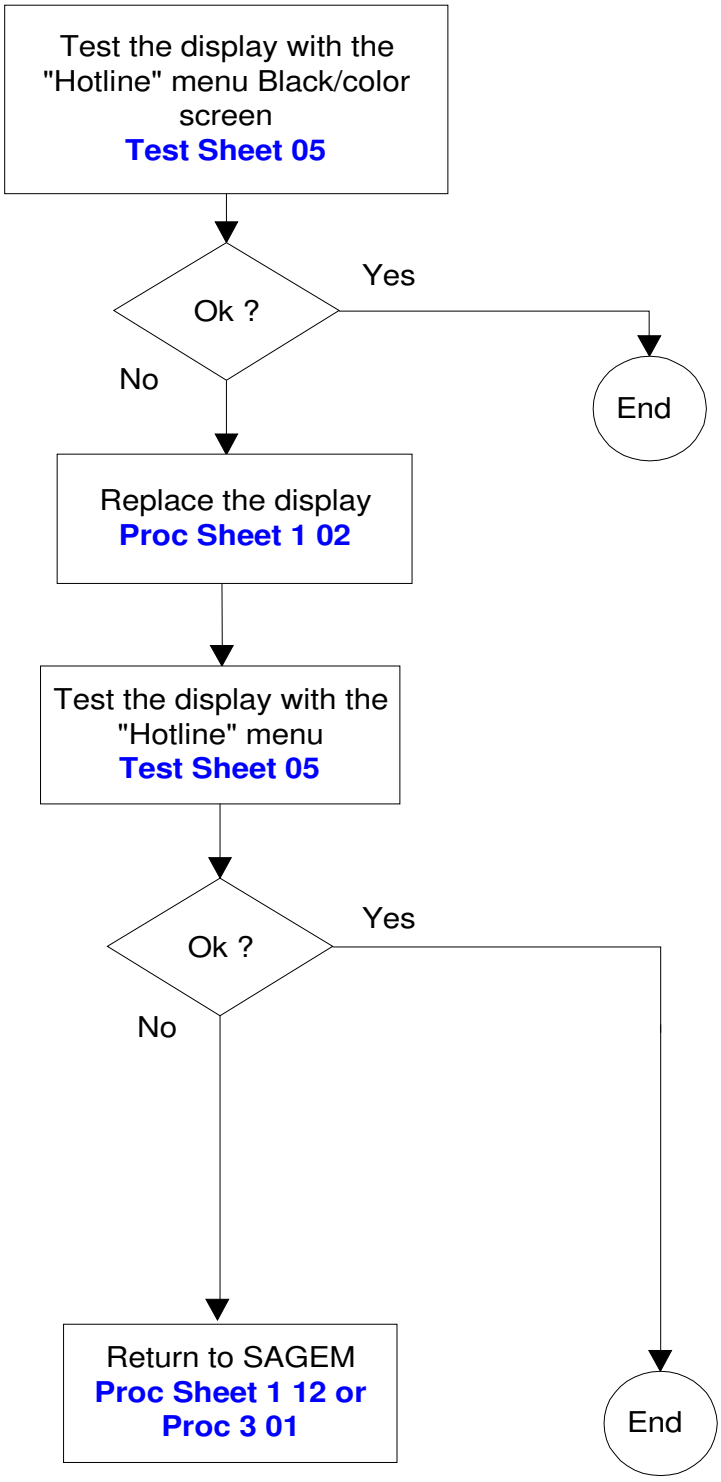
Test the display with the "Hotline" menu Black/color screen
Test Sheet 05
Ok ?
Yes
No
End
Replace the display
Proc Sheet 1 02
Test the display with the "Hotline" menu
Test Sheet 05
Ok ?
Yes
No
Return to SAGEM
Proc Sheet 1 12 or
Proc 3 01
End

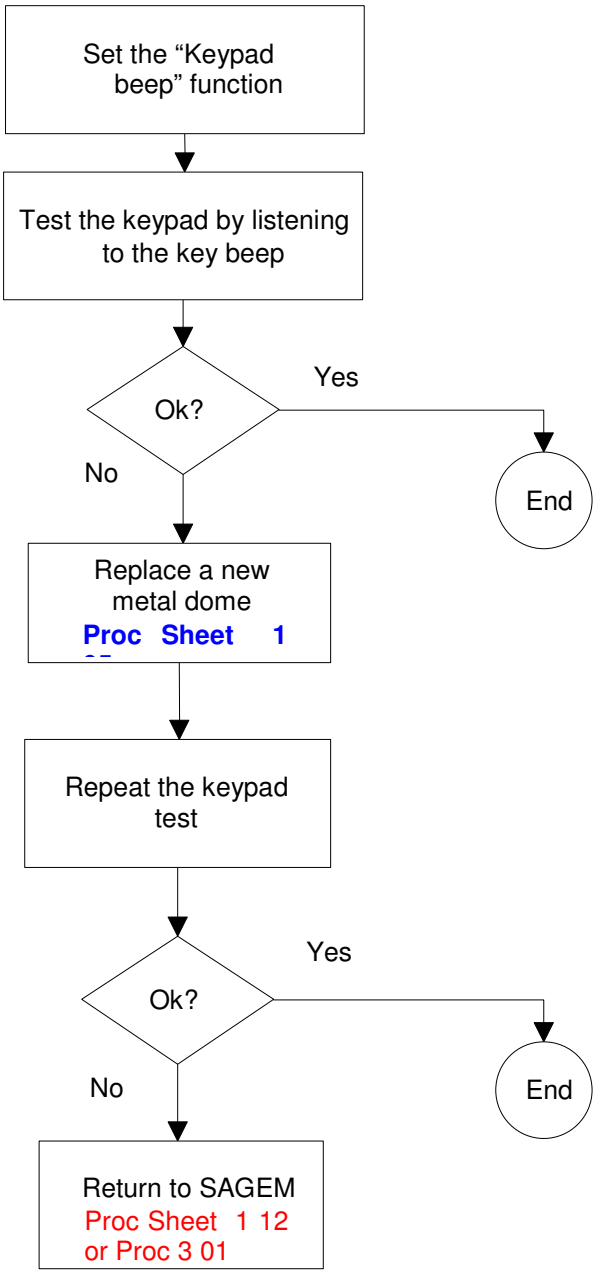
Set the “Keypad beep” function
Test the keypad by listening to the key beep
Ok?
Yes
No
End
Replace a new metal dome
Proc Sheet 1
Repeat the keypad test
Ok?
Yes
No
End
Return to SAGEM
Proc Sheet 1 12
or Proc 3 01

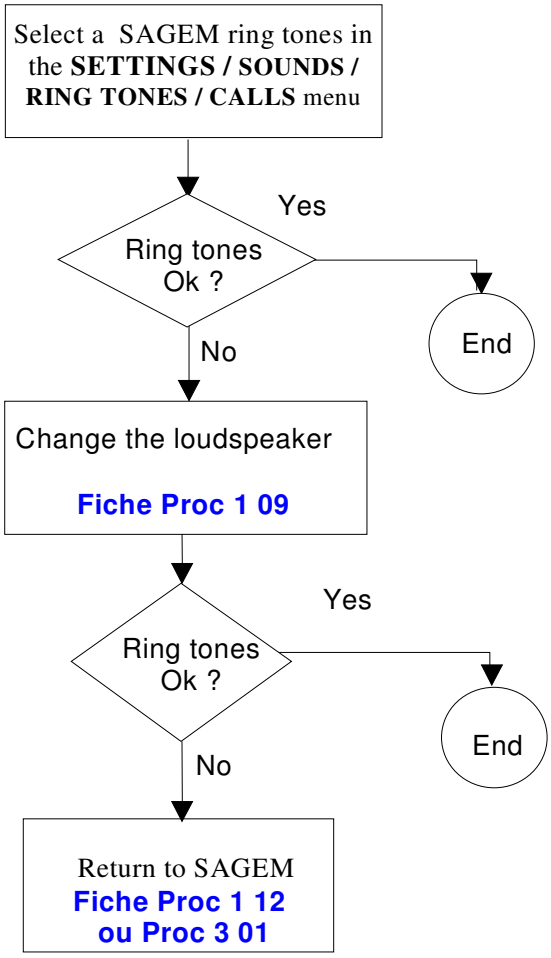
Select a SAGEM ring tones in the **SETTINGS / SOUNDS / RING TONES / CALLS** menu
Ring tones Ok ?
Yes
End
No
Change the loudspeaker
Fiche Proc 1 09
Ring tones Ok ?
Yes
End
No
Return to SAGEM
Fiche Proc 1 12
ou Proc 3 01

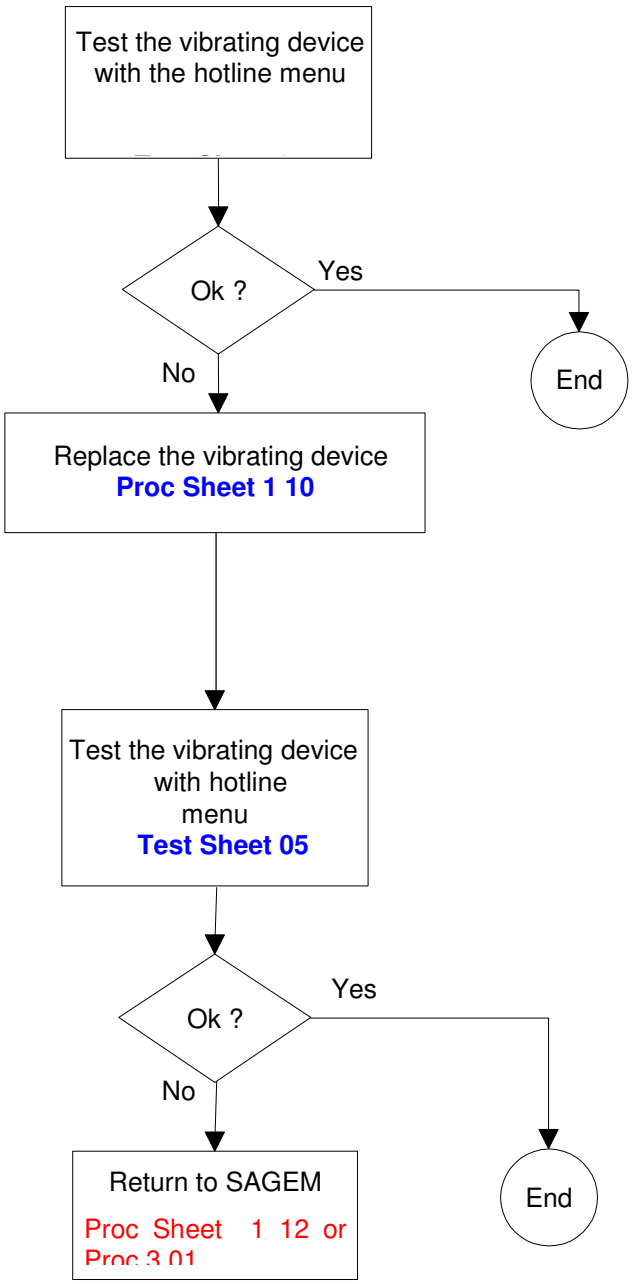
Test the vibrating device with the hotline menu
Ok ?
Yes
End
No
Replace the vibrating device
Proc Sheet 1 10
Test the vibrating device with hotline menu
Test Sheet 05
Ok ?
Yes
No
Return to SAGEM
Proc Sheet 1 12 or
Proc 3 01
End

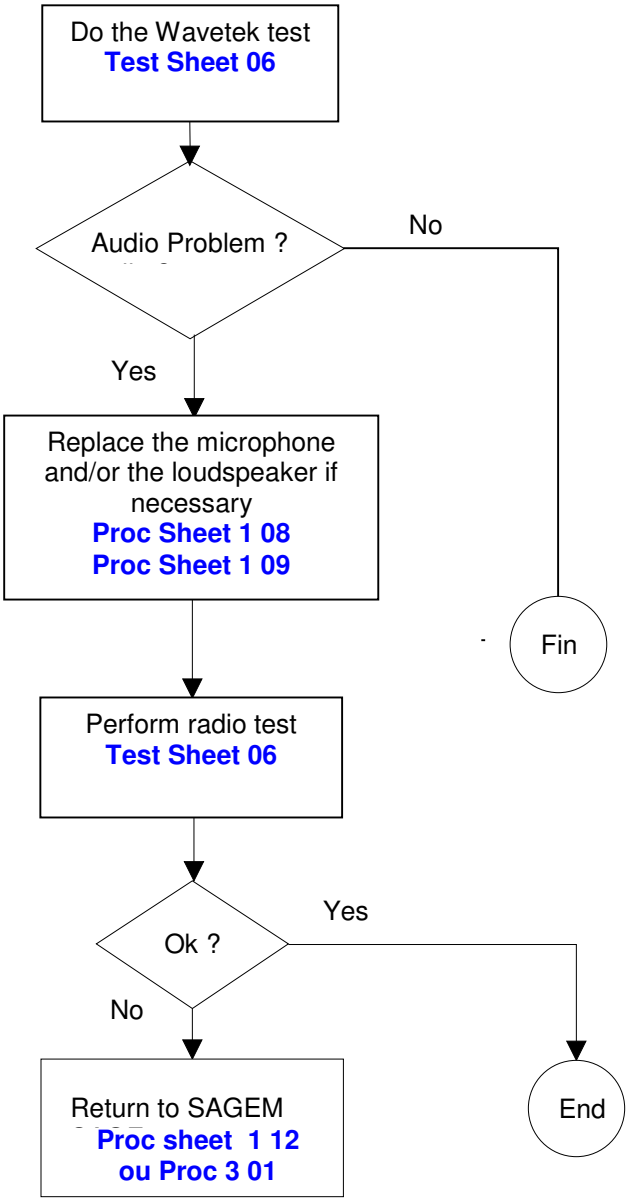
Do the Wavetek test
Test Sheet 06
Audio Problem ?
No
Yes
Replace the microphone and/or the loudspeaker if necessary
Proc Sheet 1 08
Proc Sheet 1 09
Fin
Perform radio test
Test Sheet 06
Ok ?
Yes
No
Return to SAGEM
Proc sheet 1 12
ou Proc 3 01
End

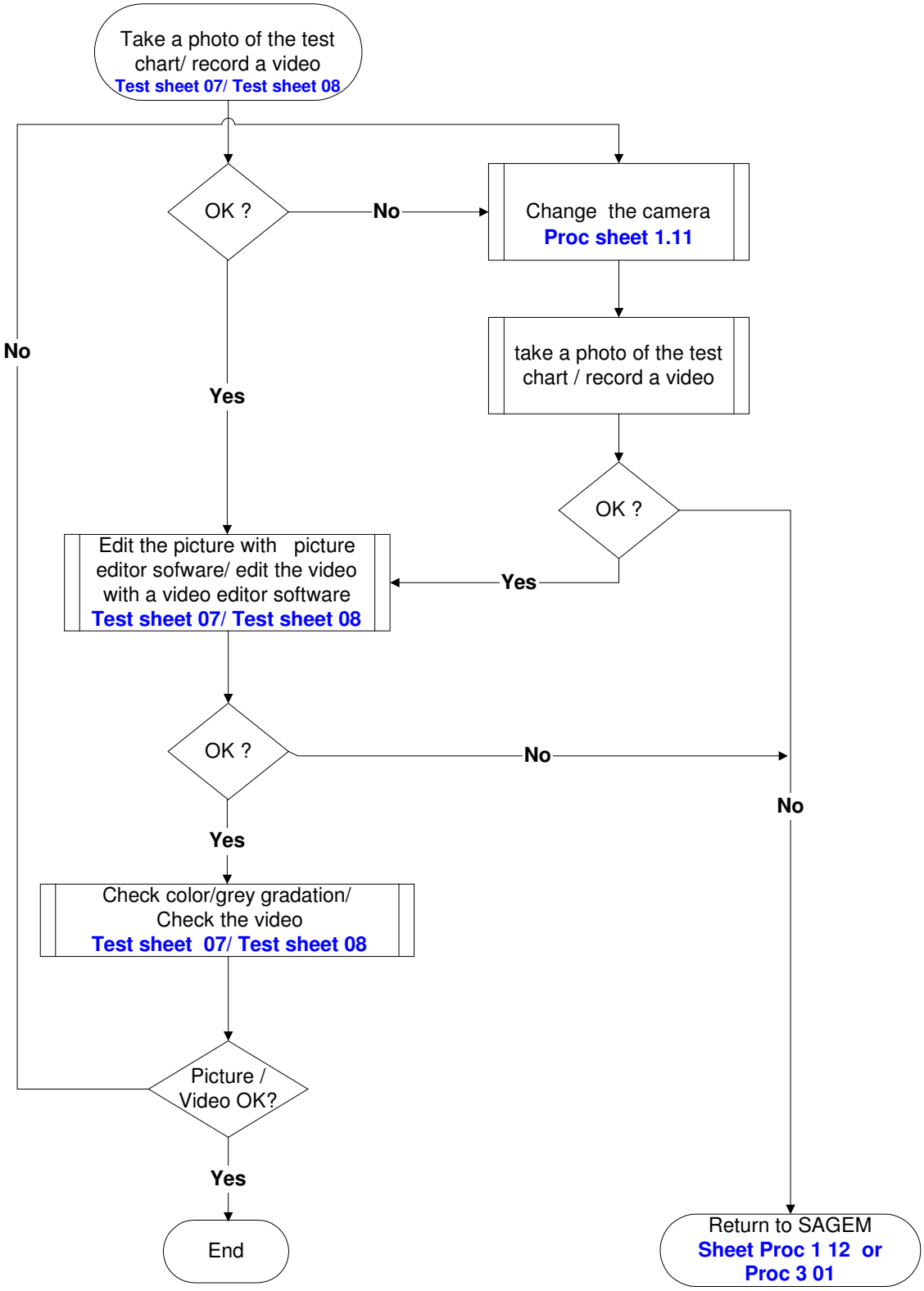
Take a photo of the test chart/ record a video
Test sheet 07/ Test sheet 08
OK ?
No
Change the camera
Proc sheet 1.11
take a photo of the test chart / record a video
OK ?
Yes
No
Yes
Edit the picture with picture editor sofware/ edit the video with a video editor software
Test sheet 07/ Test sheet 08
OK ?
No
No
Yes
Check color/grey gradation/ Check the video
Test sheet 07/ Test sheet 08
Picture / Video OK?
Yes
End
Return to SAGEM
Sheet Proc 1 12 or Proc 3 01

CHAPTER 4 - TESTS AND CHECKS

4.1 ABOUT TESTS

Tests and checks are made after the troubleshooting procedures (chapter 3) and before the maintenance procedures (chapter 5).

They are broken down into modules and are sorted by types of confirmed faults. The user must be equipped with special test tools in order to carry out the tests.

4.2 TEST TOOLS

The references of SAGEM tools, listed hereafter, are given in Appendix 1 : Composition table.

The following test tools are necessary :

1. a PC type computer,
2. the SMT maintenance software for the myX-7/ myV-75
3. the **ARC downloading kit**, including the test case provided with:
   - the data cable (to PC),
   - the "DATA/ AUDIO/ CHARGE" cable,
   - the mains power supply module.
4. the **radio test bench**, provided with:
   - SIM card of test.
   - myX-7/ myV-75 radio interface
   - Adjustable regulate power supply 0-15V / 4A
   - Wavetek 4107

– **CADEX C7000** / **C7200** / **ASTRATEK** with myX-7/ myV-75 adapter
   - Charger test kit
   - Ammeter interface myX-7/ myV-75 (the same as myX-6)
   - Voltmeter (minimum impedance : 20 KΩ per Volt in DC)
   - Ammeter

- A **Test chart**

5. an **IMEI labels printing station**, including :
   - Printer,
   - Roll of labels,
   - Connecting cable for PC (parallel printer cable),
   - Printing software,

4.3 INSTALLING ON A WORKSTATION

4.3.1 Minimum required configuration

The minimum configuration of the workstation is :

6. Processor 1Ghz,
7. 128 Mbytes of RAM,
8. Windows NT (SP 4), Windows 2000, Windows XP,
9. 2.1 Gbytes hard disk (1 Gbytes available),
10. 1 parallel port and 2 serials ports.
11. network card, sound card.
12. 1 internet access,

4.3.2 Installing the ARC downloading kit

The ARC downloading kit interfaces the SMT software with the phone to be repaired.

13. Connect the 9-pin SUB-D connector to the PC serial port (COM1).
14. Connect the power supply module to the mains power outlet.
15. Connect the phone to be repaired to the DATA/ AUDIO/ CHARGE connector.

4.3.3 SMT functions

The SMT maintenance software can :

16. Download new software if needed
17. Configure default values and checks them.
18. Unblocked the " POST CODE "
19. Delete the customer directory and SMS
20. Print identification labels.
21. Make a electronic board exchange
22. Adjust the display contrast (not available for myX-7/ myV-75)
23. Read the Site Technical Documentation (manual of repair)
24. Select a test sequence

The procedures for using these functions are described in **TEST Sheet 01**.

TEST SHEET

To run the functions described below, run the SMT application from the desktop icon.

<u>Notice:</u> The active connection with SMT (via the serial port), validate in itself the data functionality of the handset.

Download the latest software

Click on DOWNLOAD button.
Follow the procedures on the screen.
Make sure that the mobile phone is not in the sleep mode (press the Start key)

Release the " POST CODE"

1. Click on the CONFIGURE popup menu and then on RELEASE
2. Follow the procedures on the screen.

Delete the customer directory and SMS

1. Click on the CUSTOMER DATA popup menu and then ERASE DIRECTORY OR ERASE SMS.
2. Follow the procedures on the screen.

Note : There is possibility to save the directory when the ARC signed a confidential agreement.

Print identification labels

1. Click on the on LABEL popup menu and then PRINT LABEL .
2. Follow the procedures on the screen

- **Audio parameters setting**

1. Click on the AUDIO popup menu
2. Follow the procedures on the screen

SMT SEQUENCE : Series of the different functions under SMT (sequence of tests)

1. Click on SMT SEQUENCE popup menu.
2. Select the different functions you want to carry out then click on LAUNCH button.

- **Electronic board exchange**

1. Click on the SWAP popup menu , then SWAP PROCESS
2. Follow the procedures on the screen

SWAP : Electronic board Configuration

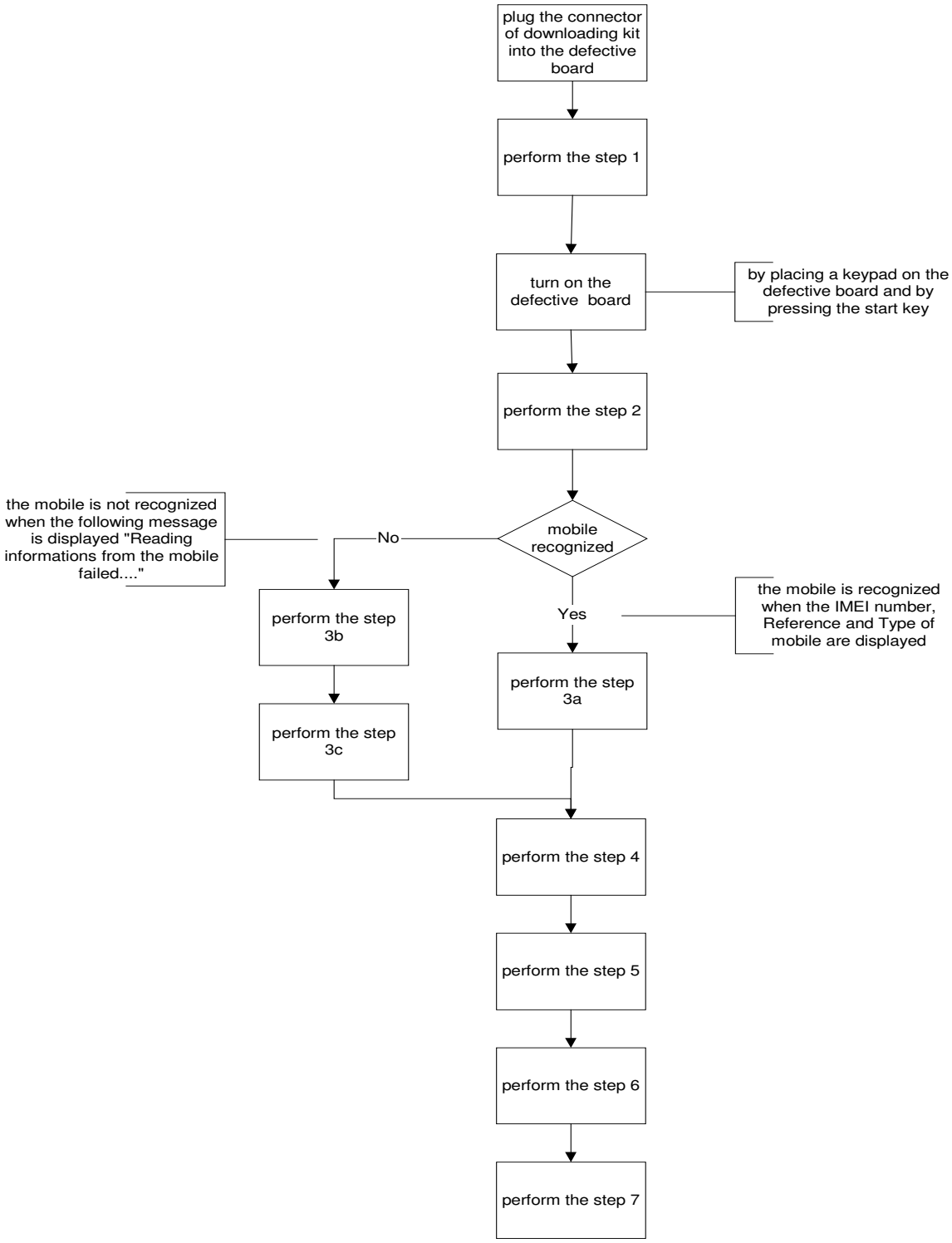

Step 1

SMT Front page

Click on the « SWAP Process » menu.

Example

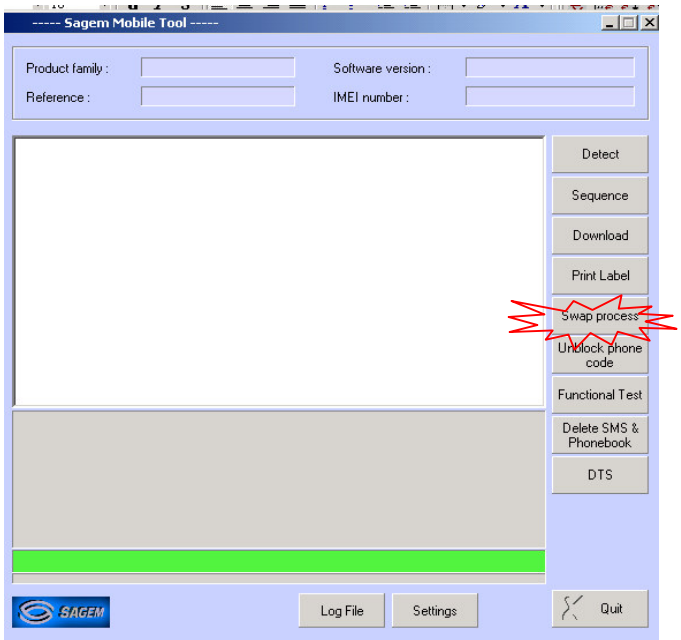

The following screen appears :

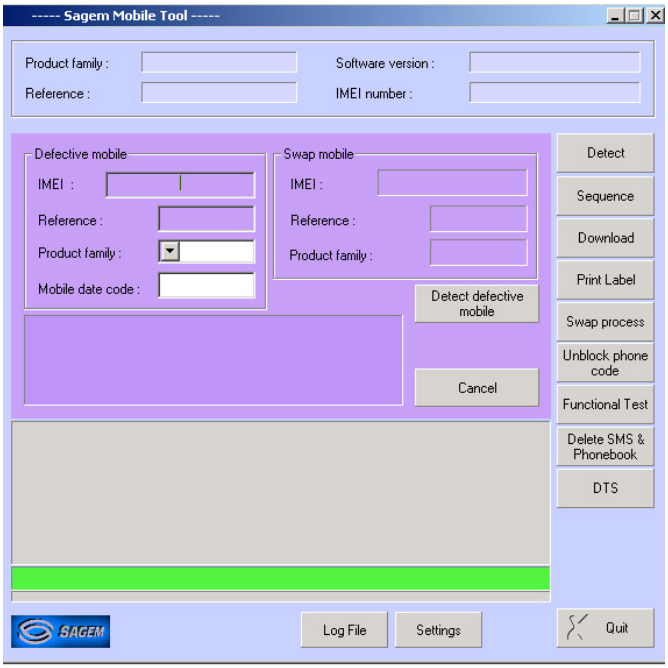

Step 2

Please click on « Detect defective mobile » button

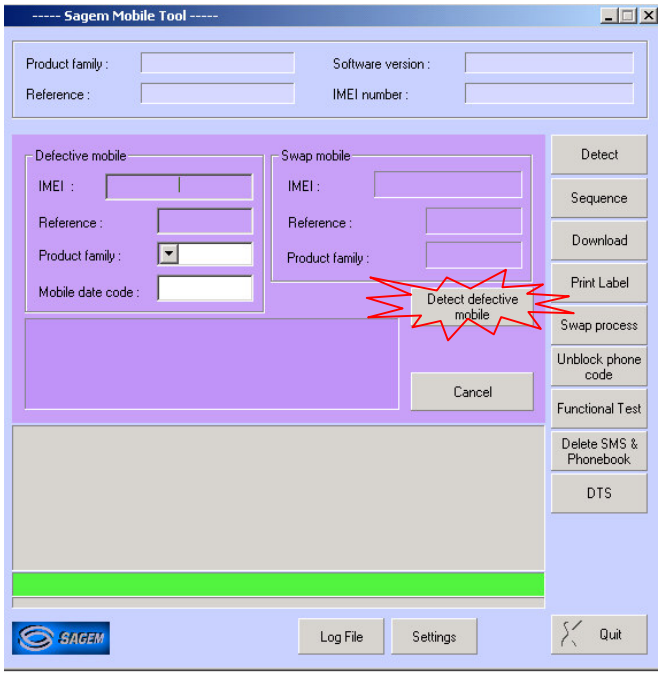

Step 3a

The following screen appears : the mobile is recognized. Then, enter the mobile date code

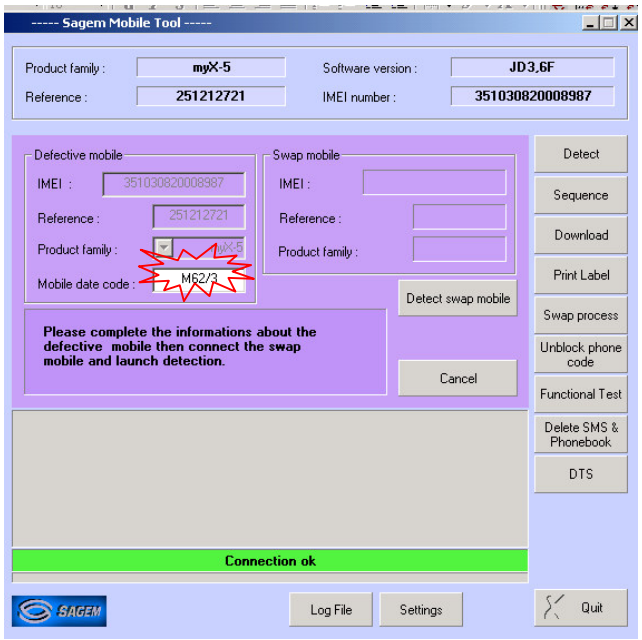

Step 3b

If this screen appears, the mobile is not recognized.

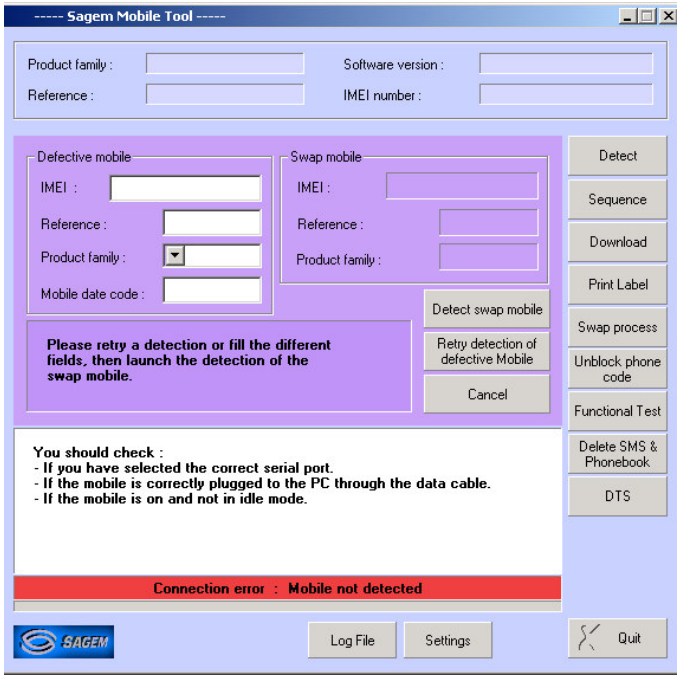

Step 3c

You must fill in the empty blanks requested according to the information written on the production label

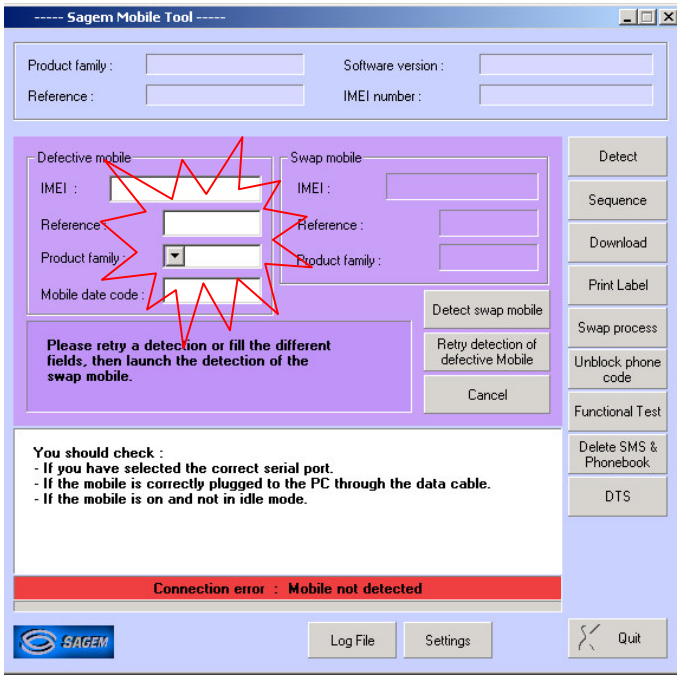

Step 4

Plug and switch on the new mobile, then push on the "Detect Swap mobile" button

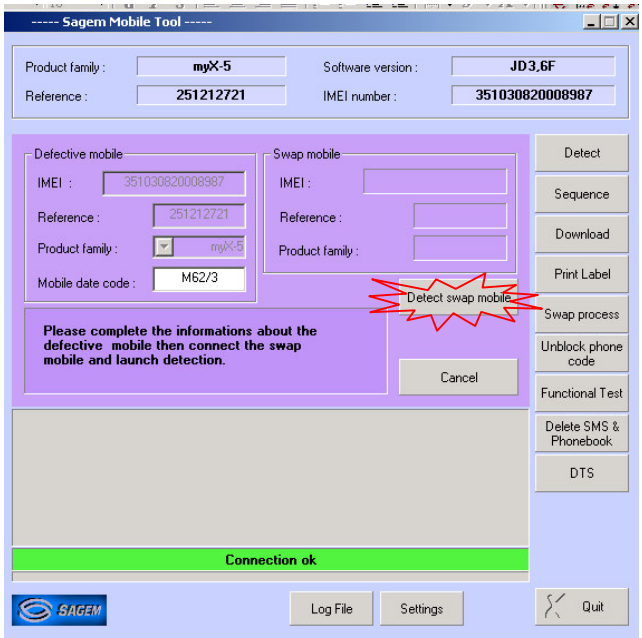

Step 5

After clicking on "OK", SMT prints the label which will be used to close the ESD bag of the defective board.

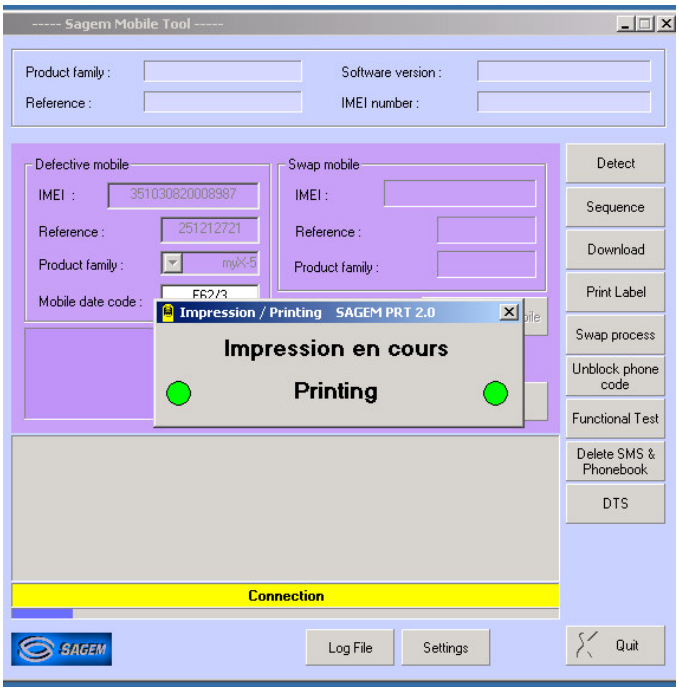

Step 6

The downloading is starting if the mobile need to be updated

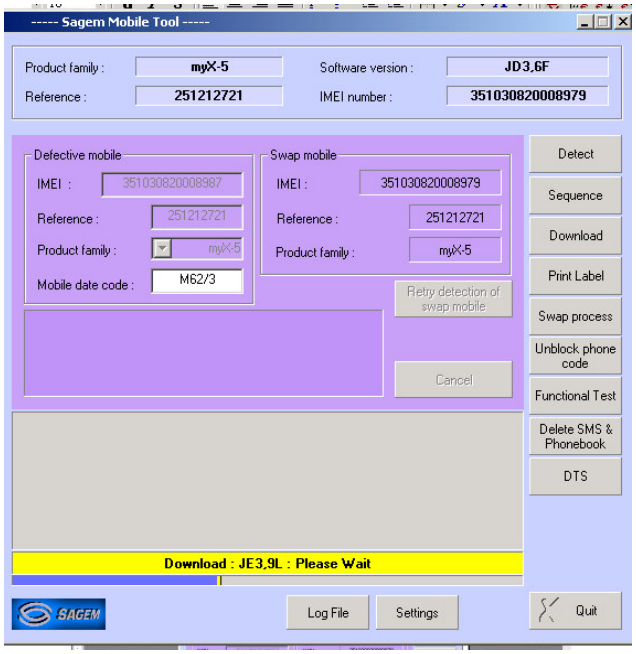

Etape 7

SMT opens the following screen to print the new label : please dial the "MAKING DATE" (Production date) written on the label of the defective mobile.

Then stick the new label on the functional mobile

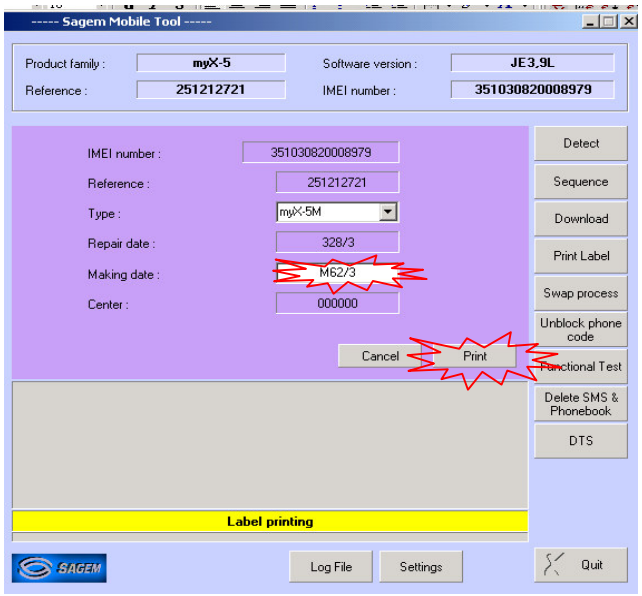

The swap board sequence is completed.

RESULTS

When old mobile is recognized, the audio parameters from the defective mobile have been sent to the functional mobile.

When old mobile is not recognized, the DEFAULTS audio parameters are sent to the functional mobile

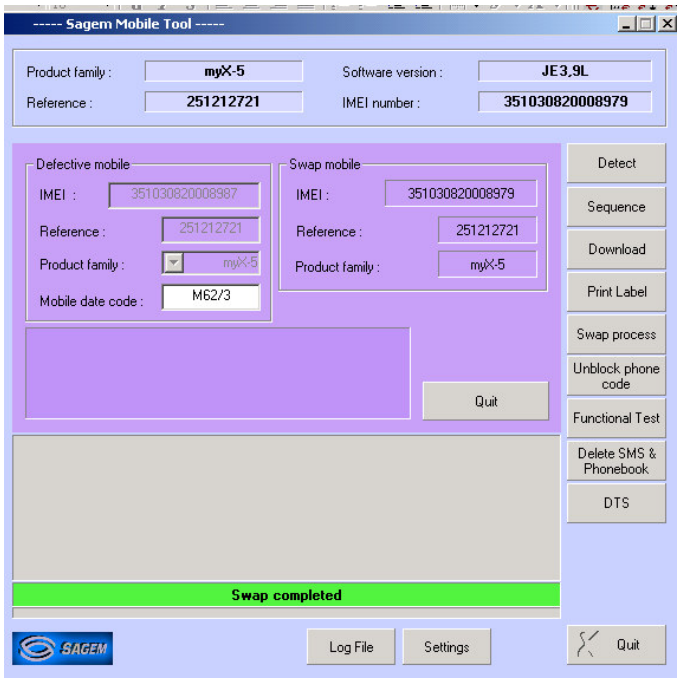

Test description

This test checks the various battery chargers.

Required tools

- a voltmeter (minimum impedance 20 kΩ per Volt in DC),
- two sockets for banana connectors for connection to the voltmeter,
- the charger test kit.

Test procedure

Two terminals are used for measurements on the charger test kit

- red (+),
- black (-).

A pushbutton selects the measurement :

- at no load (released position),
- under load (pushed in position).

Check visually the charger connector.

Connect the charger to be tested to the back of the tester.

Connect the voltmeter using the two banana connectors.

Before starting any other measurement, check that the charger is correctly powered (main voltage conform with the charger specifications).

Make the two measurements.

Check the recorded values using the following board. If the values are not included in the min & max limits , then the charger is defective.

	At no load		**Under load**	
Charger	Min.	Max.	Min.	Max.
Travel 500 mA	5,5 V	7,5 V	2 V	4 V
Simple 300 mA	9 V	15 V	1,5 V	4 V
cigar lighter	5,5 V	7,5 V	2 V	4 V

Test description

This test allows testing the various batteries.

Required tools

- CADEX C7000 / C7200 / ASTRATEK
- myX-7/ myV-75 adapters,
- myX-7/ myV-75 Ammeter interface
- a voltmeter (minimum impedance 20 kΩ per Volt in DC).

Test procedure

Insert battery on ammeter interface
Measure the identification resistor between the Z poles :

1. Li-Ion batteries : **120kΩ (tolérance = 117kΩ - 123kΩ,** according to the surrounding temperature**)**
2. Measure the battery voltage between the V poles
   a) If the voltage < 2.5 Volts the battery is defective
   b) if the voltage < 4v ,load the battery for 30 minutes with a travel charger and measure the internal resistance with a CADEX or ASTRATEK batteries testers
   c) If the voltage > 4V measure the internal resistance with a CADEX or ASTRATEK batteries testers

   Notice: Choose on the batteries tester ,the battery type (Li-ion) ,the nominal battery voltage (3,6V) and the battery capacity (1000 mA)

5 Read the result :If the internal resistance < 300 mOhms the battery is **OK**

>= 300 mOhms the battery is **defective**

Test description

This test tests the battery consumption.

Required tools

- myX-7/ myV-75 Ammeter interface
- An Ammeter.

Test procedure

Measurement when switched off

Insert the mobile (switched off) onto the tool (customer phone and battery).
Connect the ammeter to the tool between A poles:

25. Red tool terminal on the ammeter "**COM**" or "**GND**" terminal.
26. Black tool terminal on the ammeter "**+**" terminal.

NOTE: The ammeter rating must be set to DC (DC or =), range 100 mA.

If the value indicated exceeds 1 mA ,the mobile is defective.

Measuring the charge

Insert the mobile (switched off) onto the tool (customer phone and battery).

Connect the ammeter to the tool between A poles:

27. Black tool terminal on the ammeter "**COM**" or "**GND**" terminal.
28. Red tool terminal on the ammeter "**+**" terminal.

NOTE: The ammeter rating must be set to DC (DC or =), range 1 A.

Connect the customer's charger when energised (after connecting the charger to the mains power supply).
If the value indicated is lower than 150 mA ,the mobile is defective.

NOTE: When changing the ammeter rating (manual or automatic), the mobile can be disconnected.

Access to the "HOTLINE" menu

NOTE: “Hotline” menu is accessible with a valid SIM card

Access to the "HOTLINE" menu is possible with a powered up mobile.

The "HOTLINE" menu is accessed by pressing on the **∇** key and then the ***** key.

Enter the corresponding code (bold) to choose the menu to be viewed.

To go out the "HOTLINE" menu, press successively on the **C** key to return at the operational screen of the mobile.

Description of the myX-7/ myV-75 "HOTLINE" menu

- APPLICATION
  - VERSION: reads the installed software version and the IMEI code.
  - BATTERY: gives the value of the battery voltage.

- PROM : Not used.

- SIM LOCK : accesses the "SIM LOCK" menu (password required).

- LCD TEST
  - BLACK : displays the screen in black.
    - WHITE SCREEN
    - RED SCREEN
    - GREEN SCREEN
    - BLUE SCREEN
    - WHITE DRAUGTHBOARD
  - FOR PHOTO : displays functions on the screen to take a photo.
    - VIBRATING DEVICE : tests the vibrating device.

Test description

This test tests myX-7/ myV-75 phones during a call.

Required tools

- a Wavetek
- a radio interface myX-7/ myV-75.
  - an adjustable regulate power supply 0-12V / 4A

Installation

RF test

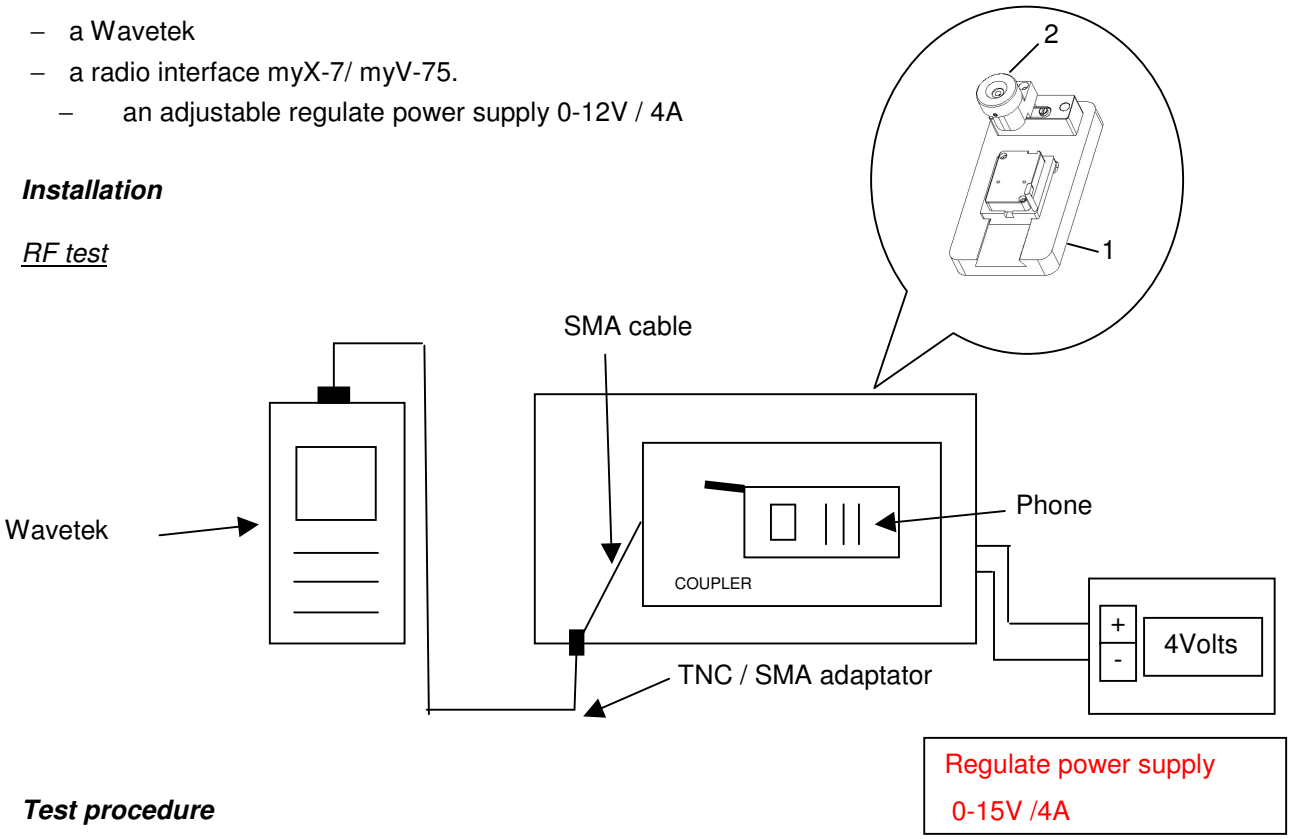

Test procedure

3. Position the myX-7/ myV-75 module on the radio interface (1) (provided with a SIM test card)
4. Put a keyboard on the module and press the start key
5. Press and lock the button (2) , press the start key
6. Switch the Wavetek on and press on "AUTOTEST".
7. Choose the corresponding program using the "UP" et "DOWN" arrows.
   29. Mobile :**myX-7**/ **myV-75**,
   30. Frequency range : **GSM, DCS ,PCS (if used)**,
   31. Coupling type : **CABLE**.

Press "ENTER" and wait until the end of the calibration.

Follow the instructions shown on the Wavetek.

Test description

This test tests the good functioning of the myX-7/ myV-75 photo function.

Required tools

- The test chart reference SAGEM
- A myX-7/ myV-75 data link
- Pictures and sounds transferring software from mobile to PC ("My pictures and sounds.exe " available on www.planetsagem.com)
- A JPEG files publishing software

Test precautions

-Camera function test has to make in a luminous environment

-Select the high resolution mode in the Settings / Photo / Size menus

- The lens must be clean .if not cleaned with a lint free wipe

Test procedure

- Put myX-7/ myV-75 at about 30 cms of the color test chart in order to visualize test chart entirely (inactive zoom).
- Start photo by pressing on the dedicated touch.
- Save the photo in the mobile.
- Link myX-7/ myV-75 with the data link (serial / USB/ IRDA), download the picture (by way of My Pictures and sounds software) on the computer.
- Open picture file by means of a JPEG editor.
- Check the Color / grey gradation presence

Remarks: This test aims to verify the good operating camera functions.

Results disparities, being able to be obtained by different situations (screen computer / ambient lighting / distance …), do not allow to concern a qualitative judgment on the photo.

Test description

This test tests the good functioning of the myX-7/ myV-75 video function.

Required tools

- A myX-7/ myV-75 data link
- Pictures, video and sounds transferring software from mobile to PC ("My pictures and sounds.exe " available on www.planetsagem.com)
- A 3GP files publishing software (ex: Quick Time)

Test precautions

-Camera function test has to make in a luminous environment

-In the Camera menu, select Video Camera and Size restriction: None

- The lens must be clean .if not cleaned with a lint free wipe

Test procedure

- Check that the SILENT MODE is unselected
- Record an entire video sequence by pressing on the dedicated touch.
- Save the video in the mobile.
- Link myX-7/ myV-75 with the data link (serial / USB/ IRDA), download the video (by way of My Pictures and sounds software) on the computer.
- Open video file by means of a 3gp editor (ex: Quick Time 6.5).
- Check video totality presence

Remarks: **This test aims to verify the good operating video functions.**

Results disparities, being able to be obtained by different situations (screen computer / ambient lighting / moving speed …), do not allow to concern a qualitative judgment on the video.

CHAPTER 5 - MAINTENANCE PROCEDURES

TECHNICAL WORK LEVELS

There are four technical work levels:

Level 0,

Level 1,

Level 2,

Level 3.

Each level represents a maintenance degree that depends on which elements are to be removed.

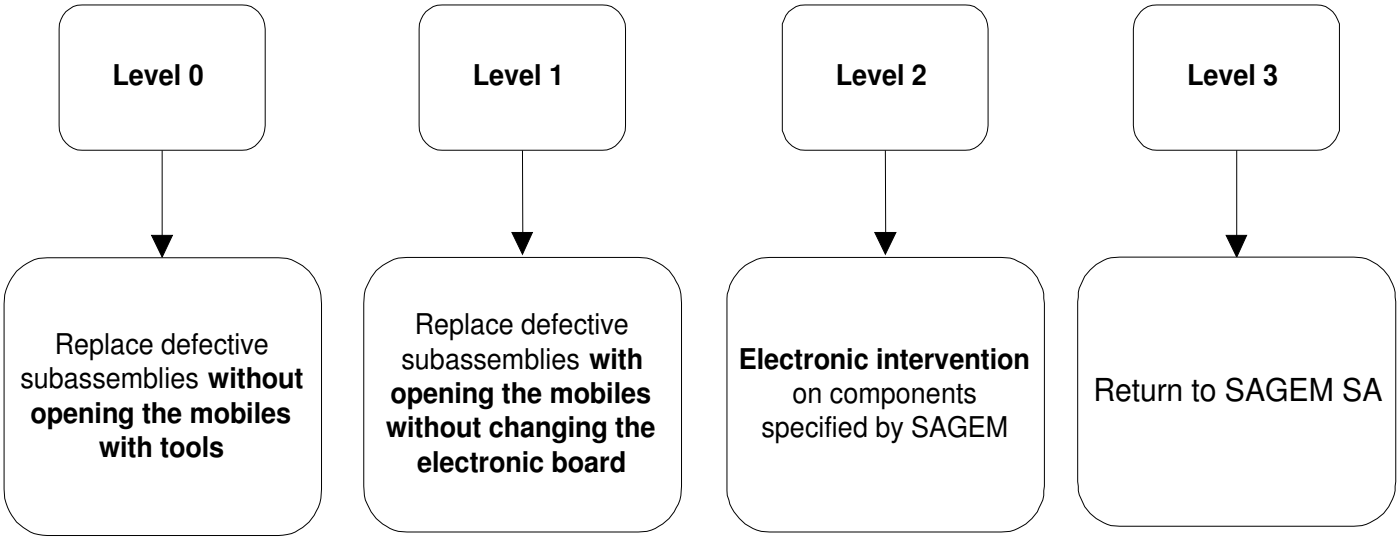

Maintenance procedure sheets are coded as follows :

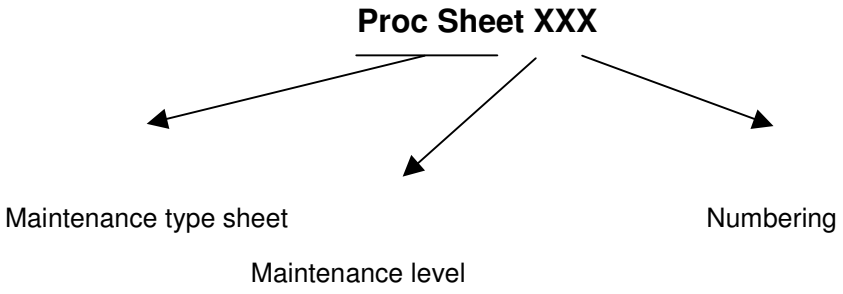

5.2 SHORT LOOP PROCESS

1. Initialisation

From the communication by Sagem and the reception of the concerned products by the short loop process, the Repair Centre shall comply with the above procedure. The application of the Short loop process will end when received the authorisation of repairing given by Sagem.

2. Administrative checks to be done by the Repair Centre

- Authorisation from Sagem for treating the reference received (Part number)

- Process to be applied : short loop process or normal process (DTS, Normal, etc…). The Repair Centre shall check if the product received has to be treated according to the short loop process.

- Controls on the warranty conditions and DOA conditions (if the Repair Centre is authorised) communicated by Sagem.

3. Tests and controls :

- Checks if there are no external shocks or oxidation marks (the covers shall be dismantled in case of exchangeable covers)

- Checks and confirmation of the defect (real call with SIM, functional test keypad , display, vibrating device, etc…)

- Check the concordance between the defect declared by the end-user and the defect observed

- Call back of the end-user or dealer (as far as possible) either in case of misunderstanding of the defect declared by the end-user or in case of the non observation of the defect. (see the appendix “Additional information about the No Fault Found –NFF- ” at the end of this document allowing according to the case to understand the return of the product)

If any doubts occurred concerning out of warranty products received, the Repair Centre shall send to Sagem Montauban (with knowledge to the Area Manager and Support Engineer) the photo of the defect.

N.B :

- The handsets shall not be dismantled (by using screwdrivers) except previous request from Sagem.
- The Repair Centre will not make any Repair (such as spare parts exchange or software upgrade) except previous communication of Sagem. The exchange of handsets or accessories are the only intervention authorised.

4. Exchange by the Repair Centre

- The Repair Centre will use the products delivered for swap to the Repair Centre for exchanging the products to the end-users (except particular process defined by Sagem).

- The under- warranty handsets and accessories received shall be exchanged to the end-user.

- The under- warranty handsets and accessories declared No Fault Found (NFF) shall be exchanged to the end-users except previous communication of Sagem.

- The Out of warranty handsets and accessories (oxidation, shocks, …) will be repaired by the Repair Centre after acceptation by the customer of an estimate according to the Sagem out of warranty repair prices communicated.

- The under- warranty and out of warranty handsets shall be sent to Sagem Montauban.

- In the frame of the Short loop process, there is no level 1 (L1) intervention

5. Reports

An exchange of an handset and its accessories shall be codified Level 3 (L3)

An accessory exchange shall be codified Level 0 (L0).

The Repair Centre shall capture all the information required for issuing and sending the Repair Reports and Status reports according to the Contractual frequency defined. The Reports shall includes the products treated by the Repair Centre under- warranty or out of warranty.

6. Procedure

From the beginning date of the Short loop process application and **minimum each week, the Repair Centre shall ship the products (handsets and accessories) to Sagem Montauban.**

61. Handsets :

- MRA Procedure for the after-Sales products (one MRA number for the products concerned by the short loop).

- MRA Procedure for DOA products (one MRA DOA number for the products concerned by the short loop) if the Repair Centre is authorised to treat the DOA products.

The MRA request shall be sent to Sagem Montauban (with knowledge to the Area Manager and Support Engineer).

The shipment of products to Sagem Montauban shall comply with the MRA procedure. Furthermore each products shall be sent with the Return Product Sheet filled in indicating the defect declared by the end-user and the defect observed by the Repair Centre (Sagem Defect codes).

The NFF products sent to Sagem Montauban shall be identified by using separate package. Furthermore this products shall be sent with the complete description of the defect declared by the end-user (not codified).

The accessories received by the Repair Centre shall be sent to Sagem Montauban sent back attached with the handset (not connected to the handset).

62. Accessories :

For the accessories received without the handsets, the procedure is the following:

Accessories return procedure to Sagem Montauban to be used. The Repair Centre shall indicate on the parcel Accessories + model (ex : myX-7/ myV-75) for the accessories received in the Repair Centre without the handsets.

7. Sagem Montauban

Sagem Montauban will ship back to the Repair Centre the same quantity of handsets and accessories as the quantity received.

8 Additional information about the no fault found

In any case: Ask to the end-user the frequency of the defect and the circumstances of its apparition (during an incoming or out-going call, while playing, while downloading, etc.). Try to answer the questions: Where? When? How?

- If the customer complains about a **"Power supply / charging"** failure : (shutting down of the mobile, problem of booting, etc.);
  - During which operation ? In which circumstances ?
  - What is the state of the battery and the charger before shipment to the repair centre ?
  - If the mobile shuts down by itself, must he enter his code pin, adjust the date and the hour when rebooting the phone?

- If the customer complains about a communication problem:
  - What are his residence zone and the reception level of the mobile (Number of receipt bar);
  - What is the state of the battery when the defect appears?
  - In case of loss of communication :
    - With or without total extinction of the mobile?
    - Does the loss of communication occur always in the same place and with the same person?
    - Does the loss of communication occur while browsing in the menus, during the communication, or during playing or downloading?

- If the customer complains about a problem of blockage of key of the keyboard:
  - In which circumstances does the problem occur?
  - Did he activate the keypad locking ?
  - Did he change or remove the upper cover ?
  - Which are the non functioning keys ?

MAINTENANCE TOOLS

The following tools are necessary to carry out maintenance operations :

Electrical screwdrivers with tightening torque settings **(0.25 NM)** ,equipped with 0,6 mm Torx .

Metal dome jig.

Plastic Tweezers.

Gloves

ESD protection strap

LEVEL 0 MAINTENANCE

1.1. ***Tools :***

1.2. Not applicable.

1.3. Preliminary operation

Turn the handset upside down

1.4. Removal procedure :

1 Unlock the back cover (1) , by pushing the lock button (2) upwards.

2 Remove rear cover (1) by lifting bottom end first

1.5. Placement procedure :

1. Replace the cover by engaging top hooks first .
2. Push down back of rear cover and push button back into locked position

1.6. Further operations :

1. Check the covers are assembled tightly

<u>Notice:</u> The myV-75 back cover removing/ replacing procedure is the same as myX-7

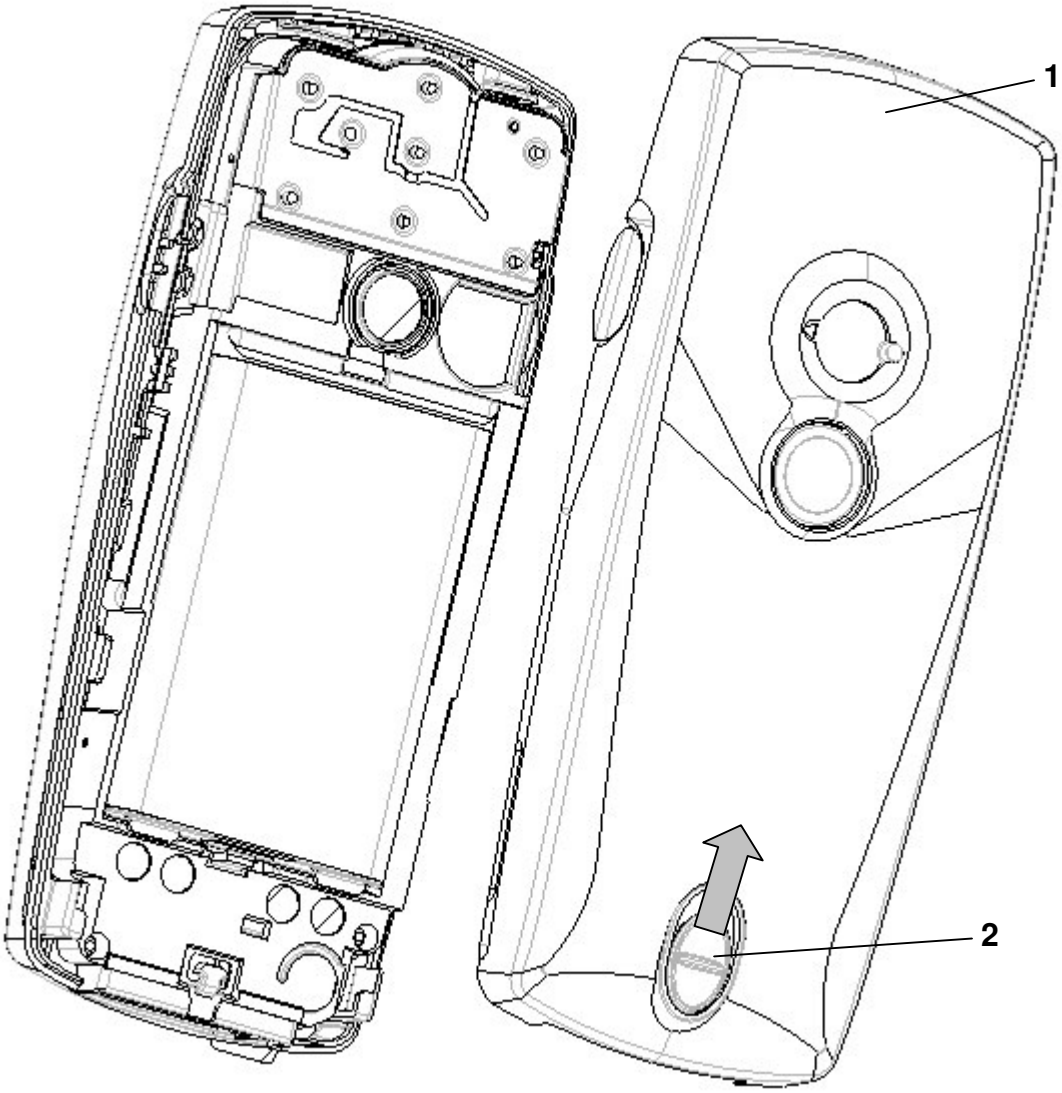
1
2

1.1. Tools :

1.2. - Not applicable

1.3. Preliminary operation :

1.4. - Switch off the mobile phone

1.5. Removal procedure :

1. Remove the back cover (Proc sheet 0 01).
2. Take out the battery (1) by first extracting the stop pins (2).

1.6. Placement procedure :

1. Place the battery by first inserting the upper section .
2. Place the back cover (Proc sheet 0 01).

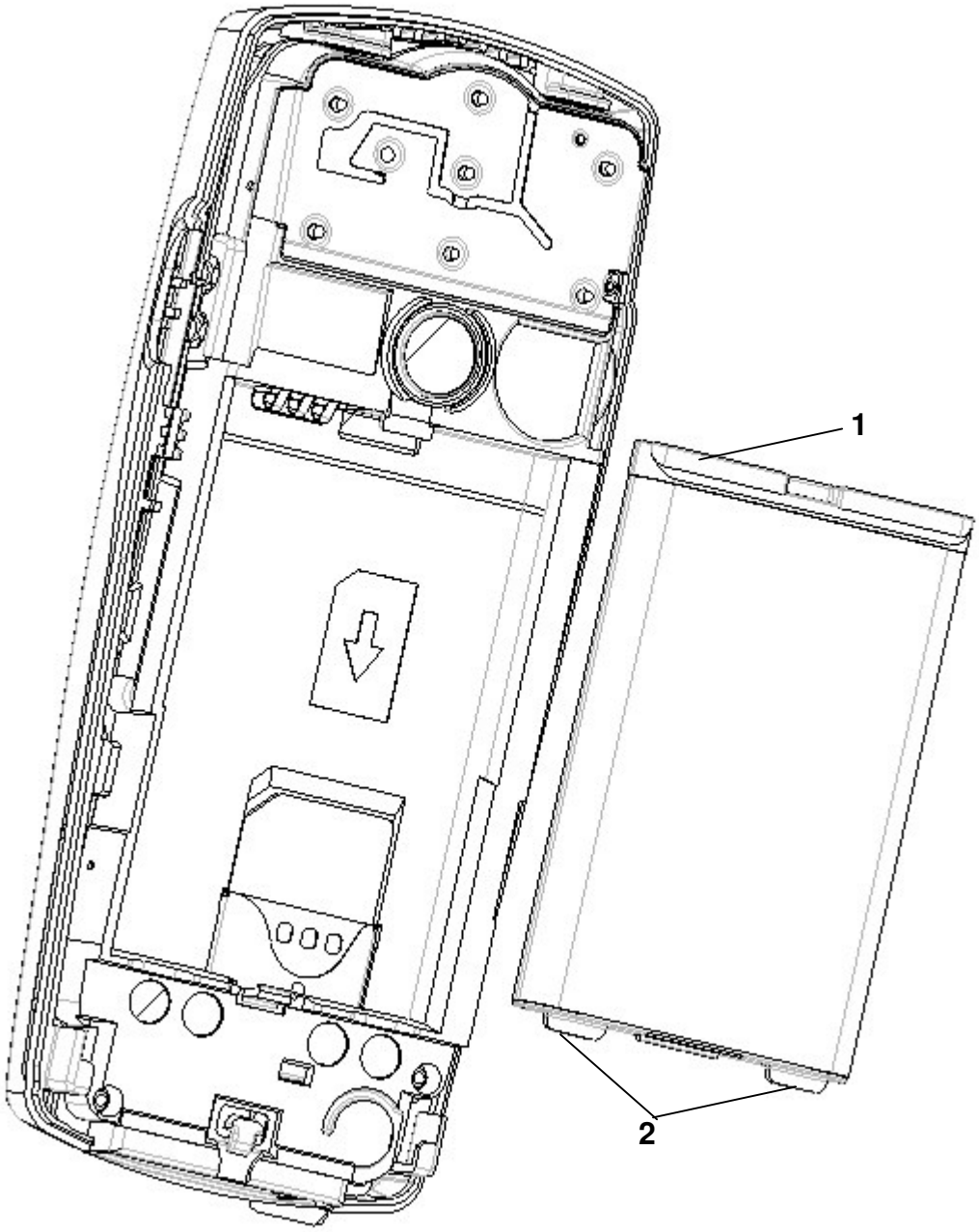
1
2

1.1. *Tools :*

- Not applicable

1.2. Preliminary operation :

1. Remove the back cover (Proc sheet 0 01).

1.3. Removal procedure :

8. Separate the two front cover (2) fixing stop pins (3) to release the electronic module (1).
9. Remove the equipped front cover (2).
10. Remove the elastomer keypad (4).

1.4. Placement procedure :

1. On the new front cover (2), position the elastomer keypad (4) in position, ensuring it is free of dust.
2. Place the module (1)onto front cover (2) ,engaging firstly the module top, then press on the module top (1)

1.5. Further operations

1. Place the back cover (Proc sheet 0 01).

<u>Notice:</u> The myV-75 front cover removing/ replacing procedure is the same as myX-7

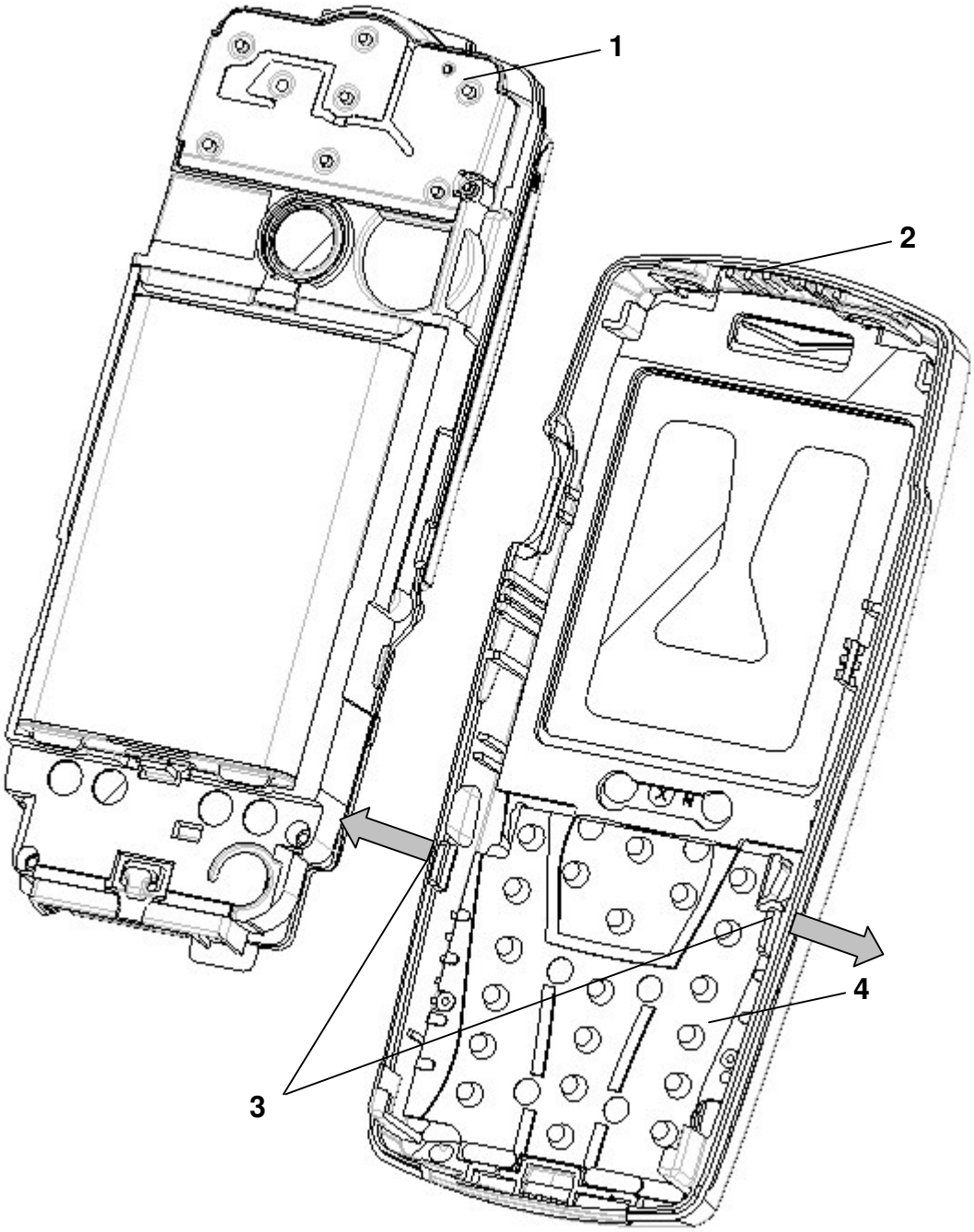
1
2
3
4

1.1. *Tools :*

- Not applicable

1.2. Preliminary operation

1. Remove the back cover (Proc sheet 0 01).
2. Remove the front cover (Proc sheet 0 03).

1.3. Removal procedure :

1. Remove the elastomer keypad (2) from the front cover (1).

1.4. Placement procedure :

1. Clean the elastomer keypad (2) with compressed air.
2. Place the elastomer keypad (2) in position in its housing

1.5. Further operations :

1. Replace the front cover (Proc sheet 0 03).
2. Replace the back cover (Proc sheet 0 01).

Notice: The myV-75 elastomer keypad removing/ replacing procedure is the same as myX-7

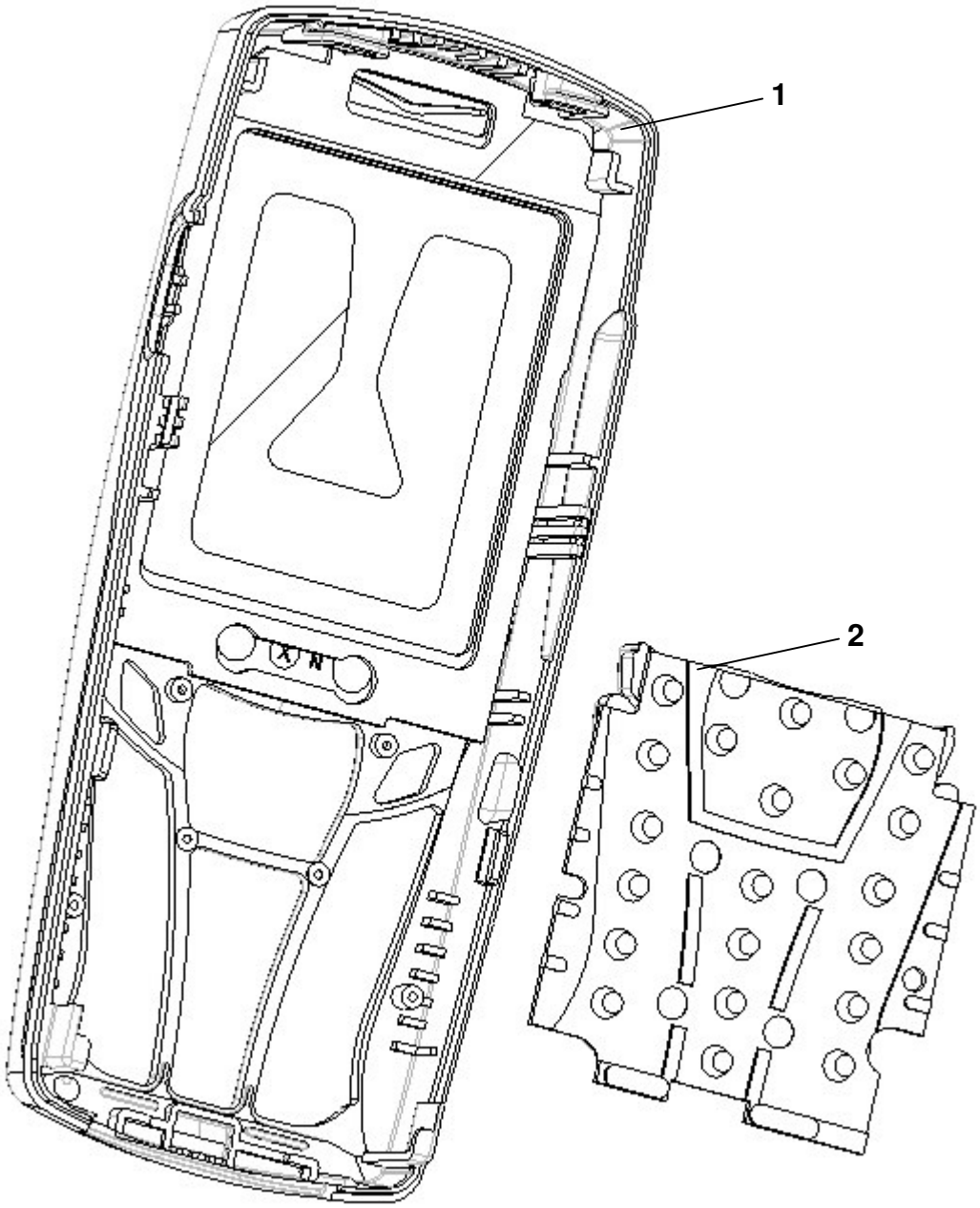
1
2

1.1. Tools :

- Not applicable

1.2. Preliminary operation

11. Remove the back cover (Proc sheet 0 01).

1.3. Removal procedure :

1. Push the knob lock (2) upward .
2. Pull out the knob lock (2).
3. In the internal cover side ,slide the locker (3) upward, while lifting it.

1.4. Placement procedure :

1. Place the knob lock (2) in its housing, then slide it downward.
2. Turn the rear cover upside down and et press the knob lock firmly.

1.5. Further operations :

1. Replace the back cover (Proc sheet 0 01).

Notice: The myV-75 locker and knob lock removing/ replacing procedure is the same as myX-7

KNOB LOCK

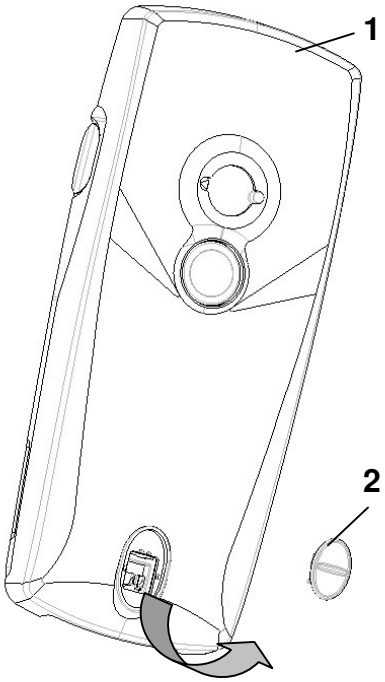

LOCKER

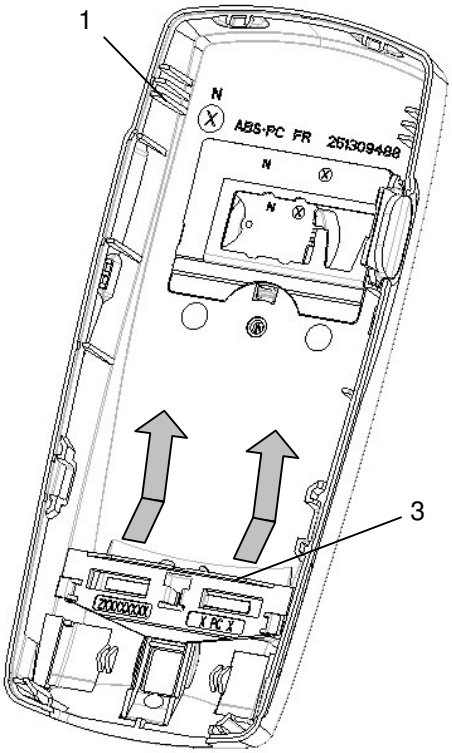
1
3
ABS-PC FR 261309488

LEVEL 1 MAINTENANCE

1.1. Tools :

- A 0.6mm torx screwdriver
gloves

Insertion/extraction flex tool

Display / metal dome jig

Notice:This procedure must be performed by an technician provided with gloves , to avoid any risk of pollution.

- **Display contacts must never be touched.**

1.2. Preliminary operation

1. Remove the back cover (Proc sheet 0 01).
2. Remove the battery (Proc sheet 0 02).
3. Remove the front cover (Proc sheet 0 03).

1.3. Removal procedure :

1. On the electronic equipped module (1), unscrew the six attachment screws (2) .
2. Remove the light guide keypad (3).
3. Replace the electronic board on the display / metal dome jig
4. Turn the display round (4) to the right of the electronic board
5. Open Zif connector lock (5) by means of the extract flex tool, by lifting lock up
6. Remove delicately the flex PCB (6).

1.4. Placement procedure :

1. Check that the connector lock (5) is lifted up
2. Introduce partially the flex PCB into the zif connector
3. Place the display (4) on the display / metal dome jig
4. Use the flex tool to insert totally the flex PCB (6) into Zif connector (5)
5. Press the Zif connector lock (5),using the tool
6. Replace the light guide keypad (3)
7. Turn the display round (4) on the electronic board
8. Position and tighten the six attachments screws with torx couple of **0,25 N.m.**
9. Verify that there are not impurities on the display.

1.1. Further operations :

1. Replace the front cover (Proc sheet 0 03).
2. Replace the battery (Proc sheet 0 02).
3. Replace the back cover (Proc sheet 0 01).
4. Carry out the radio test (Test Sheet 06).

.

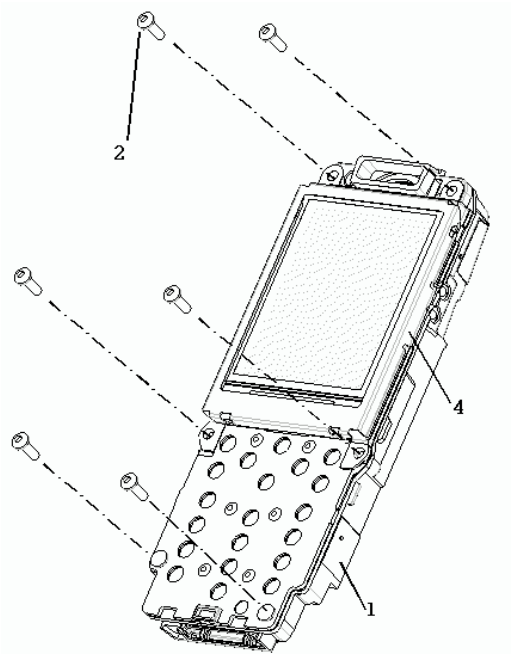
2
4
1

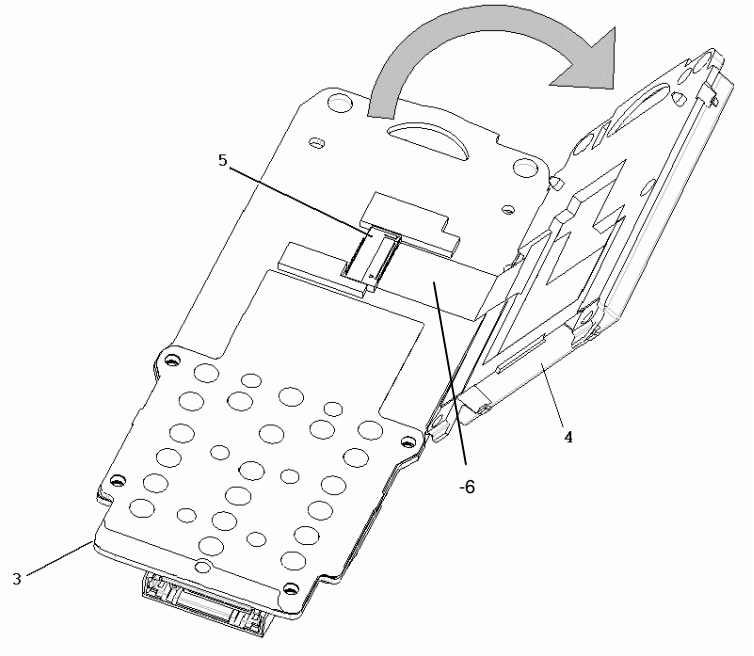
5
4
-6
3

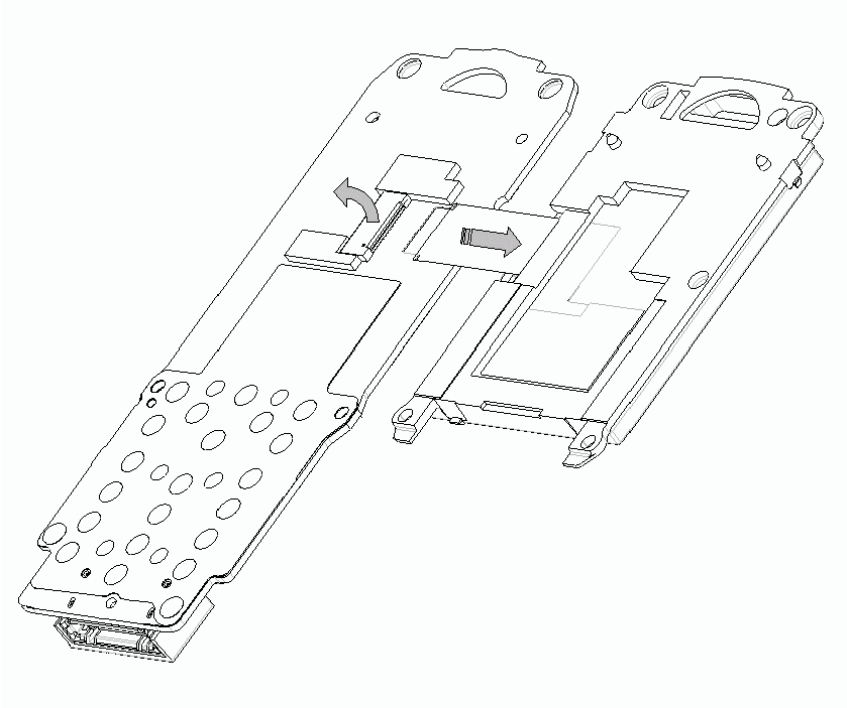

1.1. *Tools :*

- A 0.6mm torx screwdriver

1.2. Preliminary operation

1. Remove the back cover (Proc sheet 0 01).
2. Remove the battery (Proc sheet 0 02).
3. Remove the front cover (Proc sheet 0 03).

1.3. Removal procedure :

1. Unscrew the six attachment screws on the assembly plate (1)
2. Remove the assembly display (Proc sheet 1.02)
3. Remove the light guide keypad (2).

1.4. Placement procedure :

1. Replace the new light guide keypad on its housing.
2. Replace the assembly display (Proc sheet 1.02)
3. Position and tighten the six attachments screws with torx couple of **0,25 N.m.**

1.5. Further operations :

1. Replace the front cover (Proc sheet 0 03).
2. Replace the battery (Proc sheet 0 02).
3. Replace the back cover (Proc sheet 0 01).
4. Carry out radio test (Test Sheet 06).

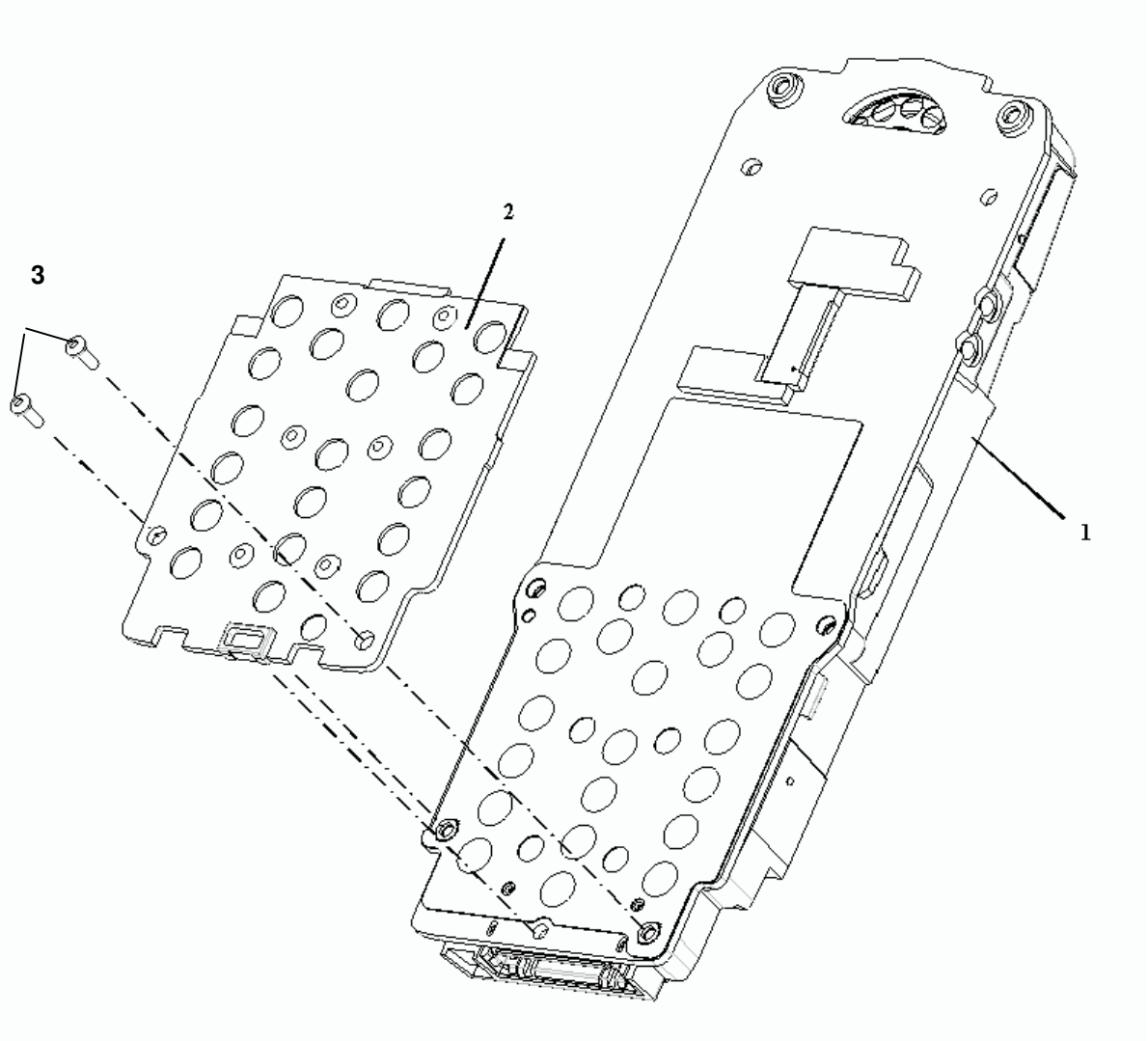
3
2
1

1.1. Tools :

- A 0.6mm torx screwdriver

1.2. Preliminary operation

1. Remove the back cover (Proc sheet 0 01).
2. Remove the battery (Proc sheet 0 02).
3. Remove the front cover (Proc sheet 0 03).

1.3. Removal procedure :

1. Unscrew the six attachment screws on the assembly plate
2. Remove the assembly display (Proc sheet 1 02)
3. Remove the light guide keypad (Proc sheet 1 03)
4. Remove the electronic board (1) on the assembly plate (2)

1.4. Placement procedure :

1. Replace the new electronic board on the assembly plate (2).
2. Replace the light guide keypad on its housing (Proc sheet 1 03).
3. Replace the assembly display (Proc sheet 1.02)
4. Position and tighten the six attachments screws with torx couple of **0,25 N.m.**

1.5. Further operations :

1. Replace the front cover (Proc sheet 0 03).
2. Replace the battery (Proc sheet 0 02).
3. Replace the back cover (Proc sheet 0 01).
4. Carry out the radio test (Test Sheet 06).

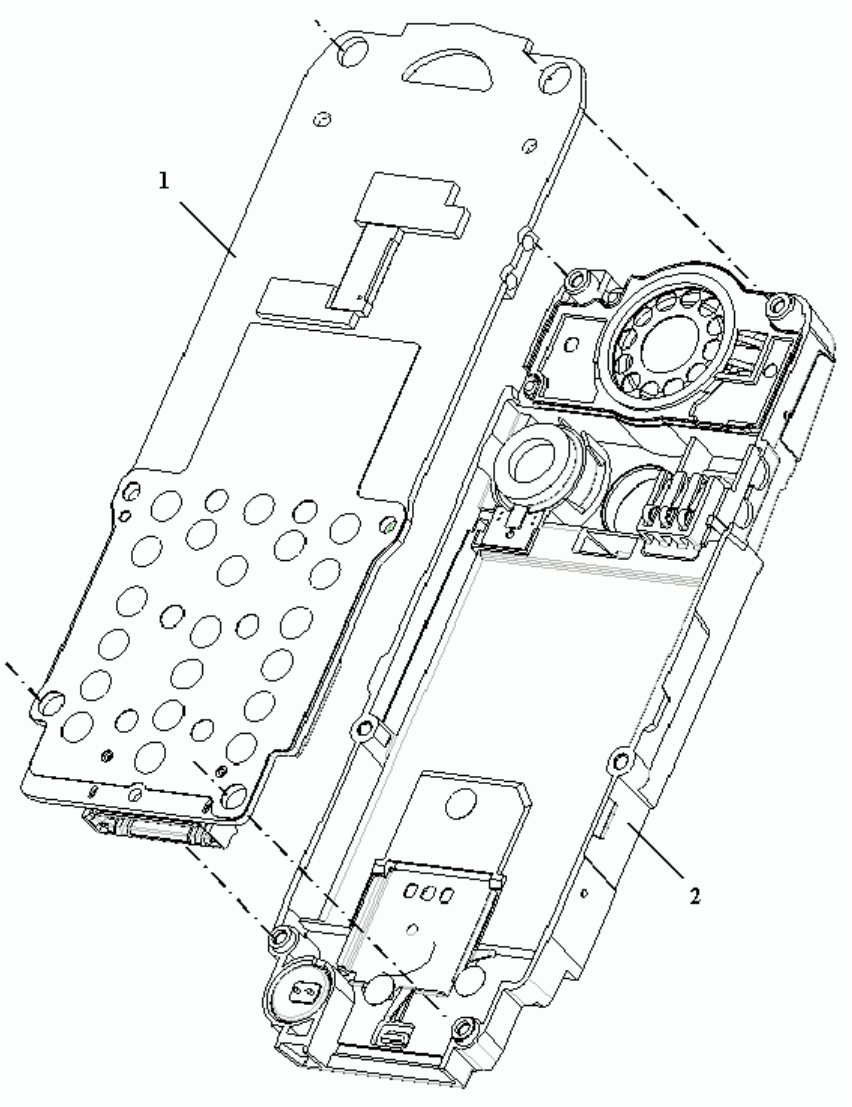
1
2

1.1. Tools :

- A 0.6mm torx screwdriver
- Gloves
- Metal dome Jig
  Tweezers

1.2. Preliminary operation

This procedure must be performed by a technician with gloves.

1. Remove the back cover (Proc sheet 0 01).
2. Remove the battery (Proc sheet 0 02).
3. Remove the front cover (Proc sheet 0 03).
4. Unscrew the six attachment screws on the electronic board (1)
5. Remove the assembly display (Proc sheet 1 02) ,then the light guide keypad (Proc sheet 1 03)

1.3. Removal procedure :

1. Lift up the metal dome (2) on the electronic card (1) with tweezers.

1.4. Placement procedure :

Warning : The metal dome is not reusable, it must be necessarily replaced by a new metal dome, unless the board is swapped and sent as level 3

1. Replace the metal dome on the electronic card , using the metal dome jig.

1.5. Further operations :

1. Replace the new electronic board on the assembly plate (2).(Proc sheet 1.04)
2. Replace the light guide keypad (Proc sheet 1.03)
3. Replace the assembly display (Proc sheet 1.02)
4. Position and tighten the six attachments screws with torx settings of **0,25 N.m.**
5. Replace the front cover (Proc sheet 0 03).
6. Replace the battery (Proc sheet 0 02).
7. Replace the back cover (Proc sheet 0 01).
8. Carry out the radio test (Test Sheet 06).

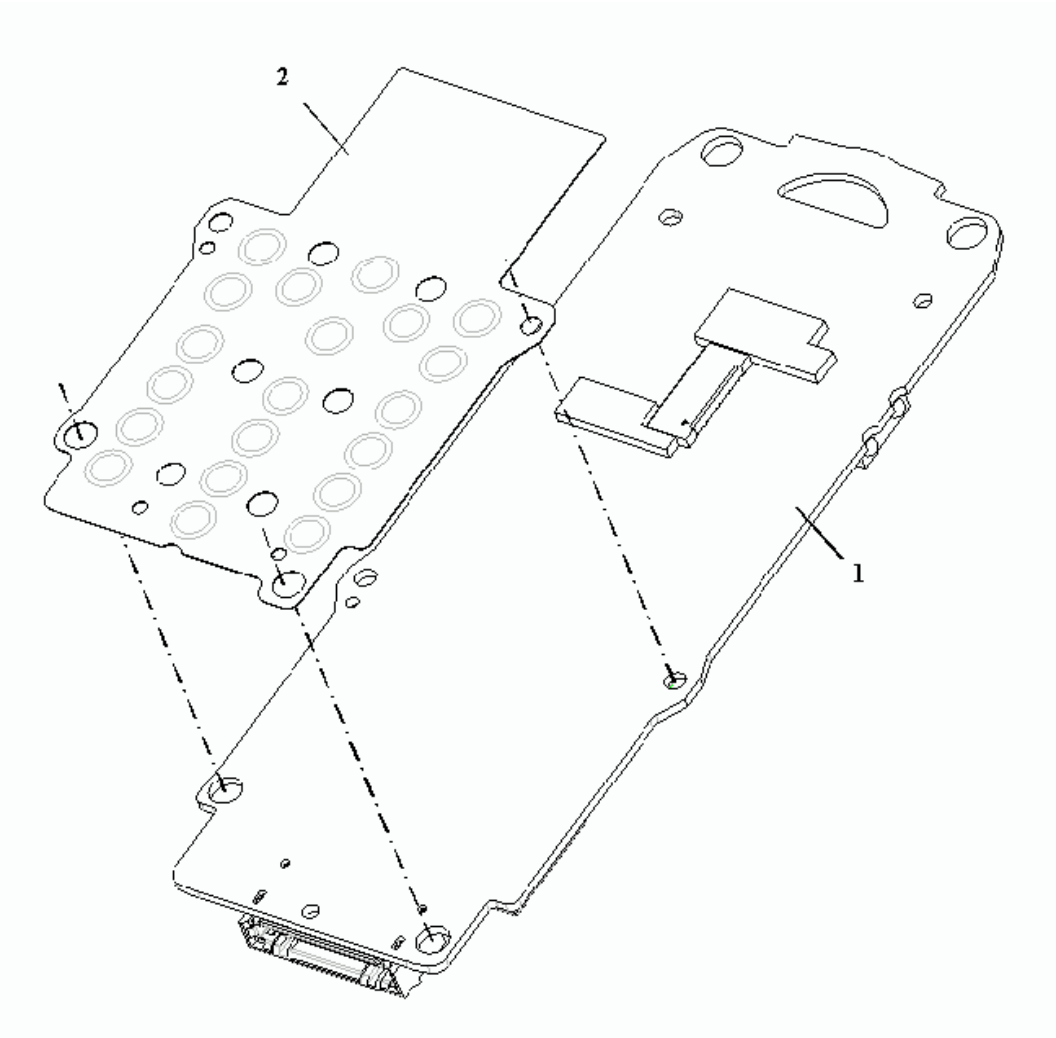
2
1

1.1. *Tools :*

Not applicable

1.2. Preliminary operation :

1. Remove the back cover (Proc sheet 0 01).
2. Remove the battery (Proc sheet 0 02).
3. Remove the SIM card .
4. Remove the front cover (Proc sheet 0 03).
5. Unscrew the six attachment screws on the electronic board .
6. Remove the assembly display (Proc sheet 1 02)
7. Remove the light guide keypad (Proc sheet 1 03)
8. Remove the electronic board.(Proc sheet 1 04)

1.3. Removal procedure :

1. On the assembly plate (2), lookeed at from the battery side, press firmly the SIM locker (1) until its extraction .
2. Remove the SIM cover (1).

1.4. Placement procedure :

1. Place the SIM cover (1) in position in its housing.
2. Click fit the SIM cover (1) on the plate.

1.5. Further operations :

1. Remove the electronic board on the assembly plate.(Proc sheet 1 04)
2. Replace the light guide keypad (Proc sheet 1.03)
3. Replace the assembly display (Proc sheet 1 02)
4. Position and tighten the six attachments screws with torque of **0,25 N.m.**
5. Replace the front cover /battery / back cover (Proc sheet 0 01 / 0 02 / 0 03).
6. Carry out the radio test (Test Sheet 06).

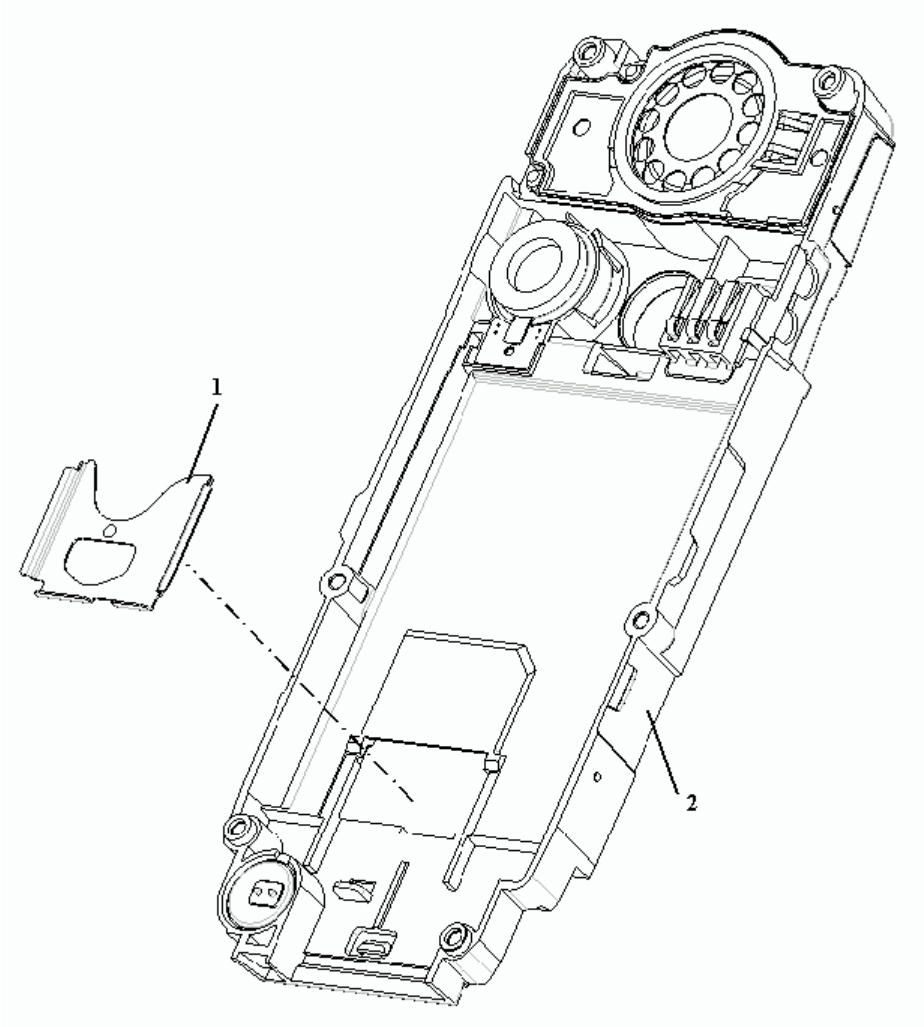
1
2

1.1. Tools :

- A 0.6mm torx screwdriver
- Tweezers

1.2. Preliminary operation

1. Remove the back cover (Proc sheet 0 01).
2. Remove the battery (Proc sheet 0 02).
3. Remove the front cover (Proc sheet 0 03).
4. Unscrew the six attachment screws on the electronic board.
5. Remove the assembly display , then the light guide keypad (Proc sheet 1 02 / 1 03)
6. Remove the electronic board.(Proc sheet 1 04)

1.3. Removal procedure :

1. Remove the battery connector (1) , using tweezers

1.4. Placement procedure :

1. Place the battery connector (1) in position in its housing , respecting the foolproof device.

1.5. Further operations :

1. Remove the electronic board on the assembly plate.(Proc sheet 1 04)
2. Replace the light guide keypad (Proc sheet 1.03)
3. Replace the assembly display (Proc sheet 1 02)
4. Position and tighten the six attachments screws with torx settings of **0,25 N.m.**
5. Replace the front cover /battery / back cover (Proc sheet 0 01 / 0 02 / 0 03).
6. . Carry out the radio test (Test Sheet 06).

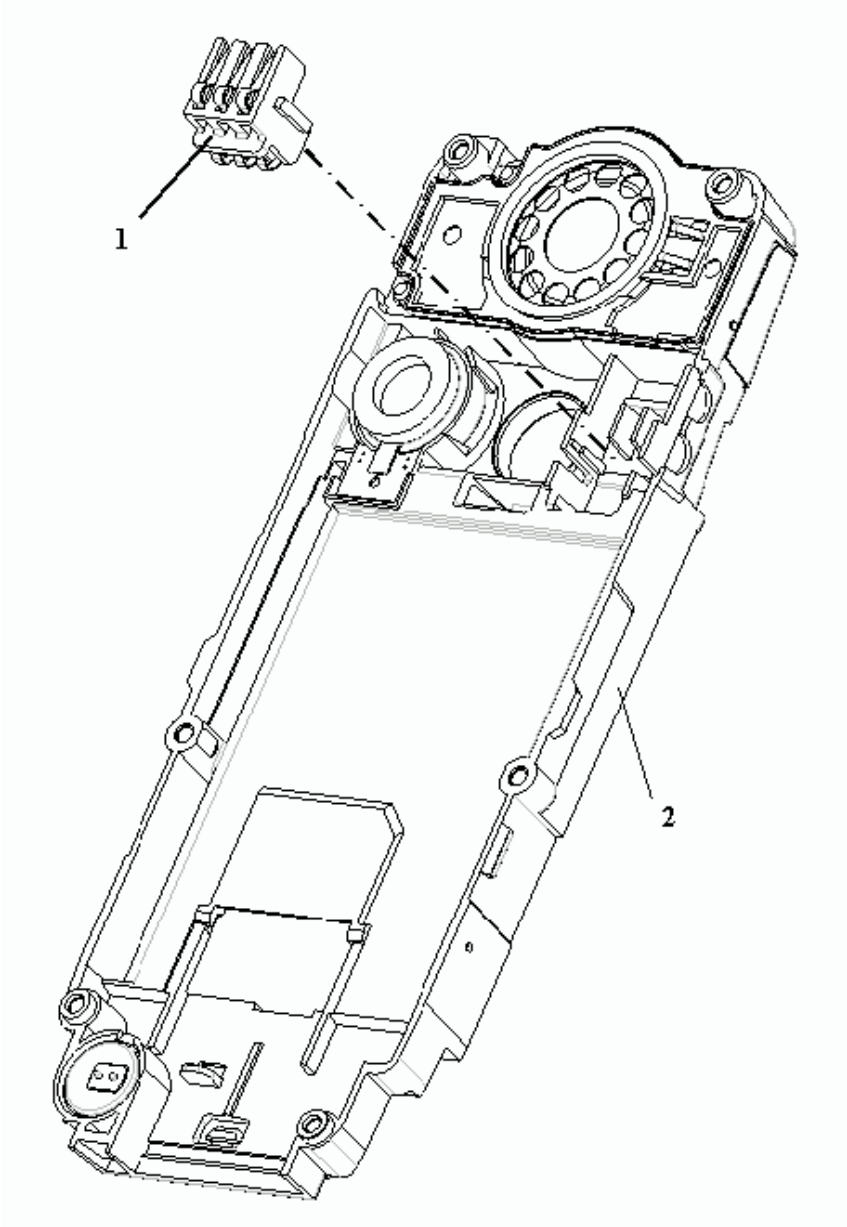
1
2

1.1. Tools :

- A 0.6mm torx screwdriver
- Tweezers

1.2. Preliminary operation

1. Remove the back cover (Proc sheet 0 01).
2. Remove the battery (Proc sheet 0 02).
3. Remove the front cover (Proc sheet 0 03).
4. Unscrew the six attachment screws on the electronic board.
5. Remove the assembly display , then the light guide keypad (Proc sheet 1 02 / 1 03)
6. Remove the electronic board.(Proc sheet 1 04)

1.3. Removal procedure:

1. Remove the microphone (1) , using tweezers.

1.4. Placement procedure :

1. Put the microphone (1) in position in its housing .

1.5. Further operations :

1. Remove the electronic board on the assembly plate. .(Proc sheet 1 04)
2. Replace the light guide keypad (Proc sheet 1.03)
3. Replace the assembly display (Proc sheet 1 02)
4. Position and tighten the six attachments screws with torx settings of **0,25 N.m.**
5. Replace the front cover /battery / back cover (Proc sheet 0 01 / 0 02 / 0 03).
6. Carry out the radio test (Test Sheet 06).

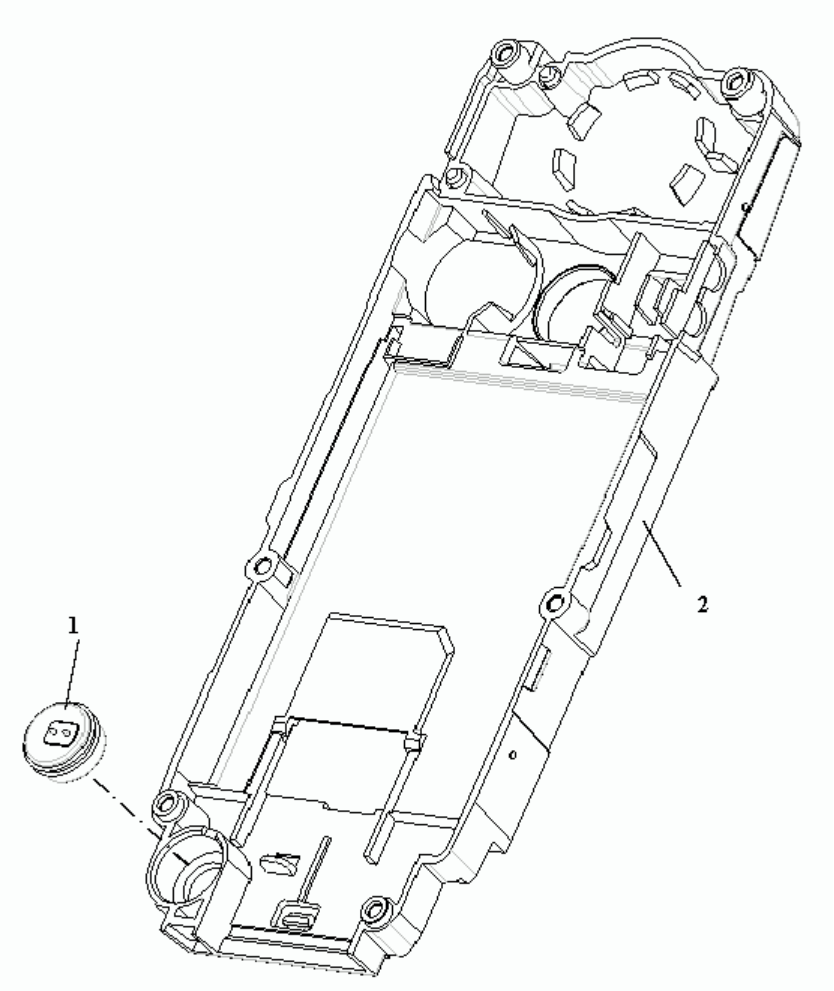
1
2

1.1. Tools :

- A 0.6mm torx screwdriver
- Tweezers

1.2. Preliminary operation

1. Remove the back cover (Proc sheet 0 01).
2. Remove the battery (Proc sheet 0 02).
3. Remove the front cover (Proc sheet 0 03).
4. Unscrew the six attachment screws on the electronic board.
5. Remove the assembly display , then the light guide keypad (Proc sheet 1 02 / 1 03)
6. Remove the electronic board.(Proc sheet 1 04)

1.3. Removal procedure :

Notice: do not touch the loudspeaker diaphragm

1. Remove, with the tweezers, the equipped loudspeaker (1) in its housing (2).

1.4. Placement procedure :

1. Put the loudspeaker in its housing, respecting the foolproof device

1.5. Further operations :

1. Remove the electronic board on the assembly plate. .(Proc sheet 1 04)
2. Replace the light guide keypad (Proc sheet 1.03)
3. Replace the assembly display (Proc sheet 1 02)
4. Position and tighten the six attachments screws with torx settings of **0,25 N.m.**
5. Replace the front cover /battery / back cover (Proc sheet 0 01 / 0 02 / 0 03).
6. Carry out the radio test (Test Sheet 06).

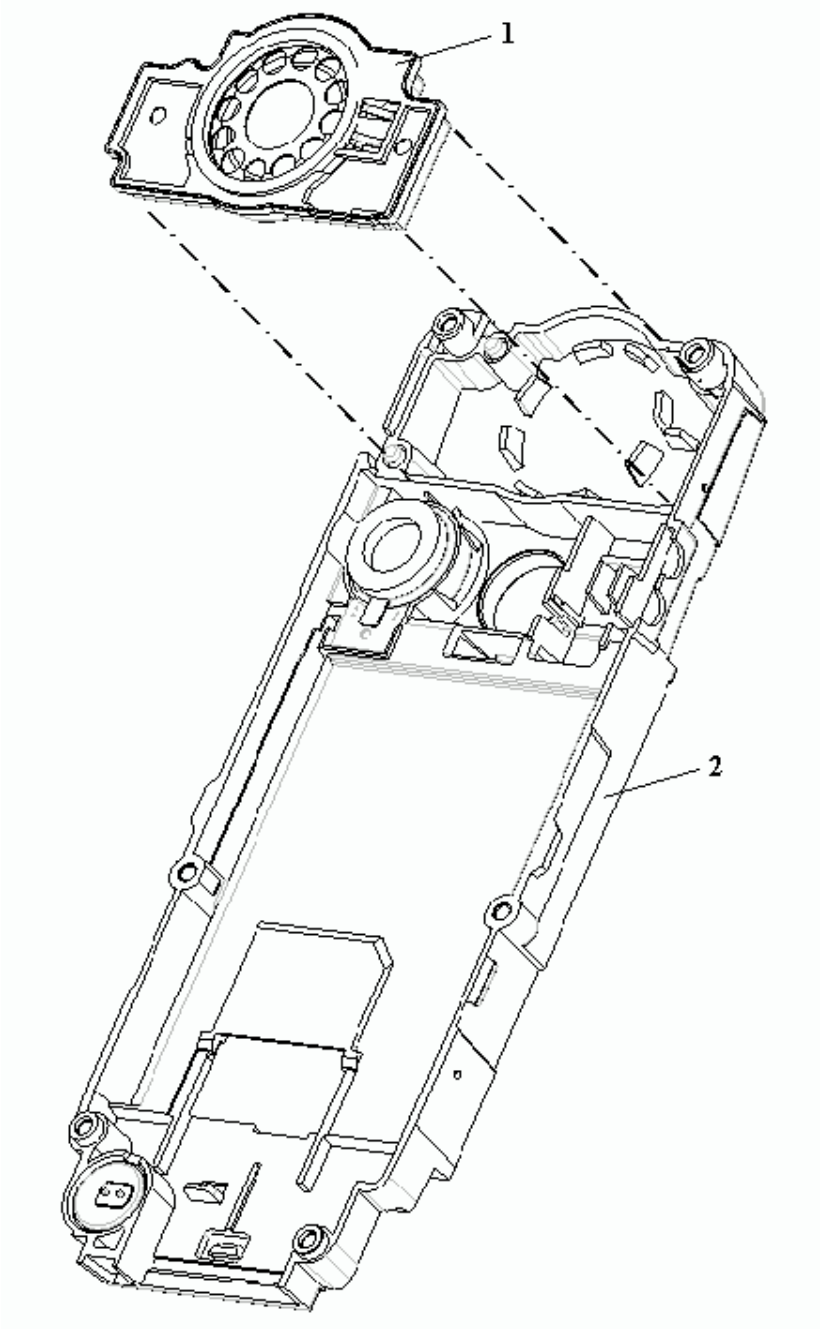
1
2

1.1. Tools :

- A 0.6mm torx screwdriver
- Tweezers

1.2. Preliminary operation :

1. Remove the back cover (Proc sheet 0 01).
2. Remove the battery (Proc sheet 0 02).
3. Remove the front cover (Proc sheet 0 03).
4. Unscrew the six attachment screws on the electronic board.
5. Remove the assembly display , then the light guide keypad (Proc sheet 1 02 / 1 03)
6. Remove the electronic board (2).(Proc sheet 1 04)

1.3. Removal procedure :

1. With tweezers, remove the vibrating device (1) .

1.4. Placement procedure :

1. Place the vibrating device (1) into position on the plate (2), respecting the foolproof device.

1.5. Further operations :

1. Remove the electronic board on the assembly plate(2). .(Proc sheet 1 04)
2. Replace the light guide keypad (Proc sheet 1.03)
3. Replace the assembly display (Proc sheet 1 02)
4. Position and tighten the six attachments screws with torx settings of **0,25 N.m.**
5. Replace the front cover /battery / back cover (Proc sheet 0 01 / 0 02 / 0 03).
6. Carry out the radio test (Test Sheet 06).

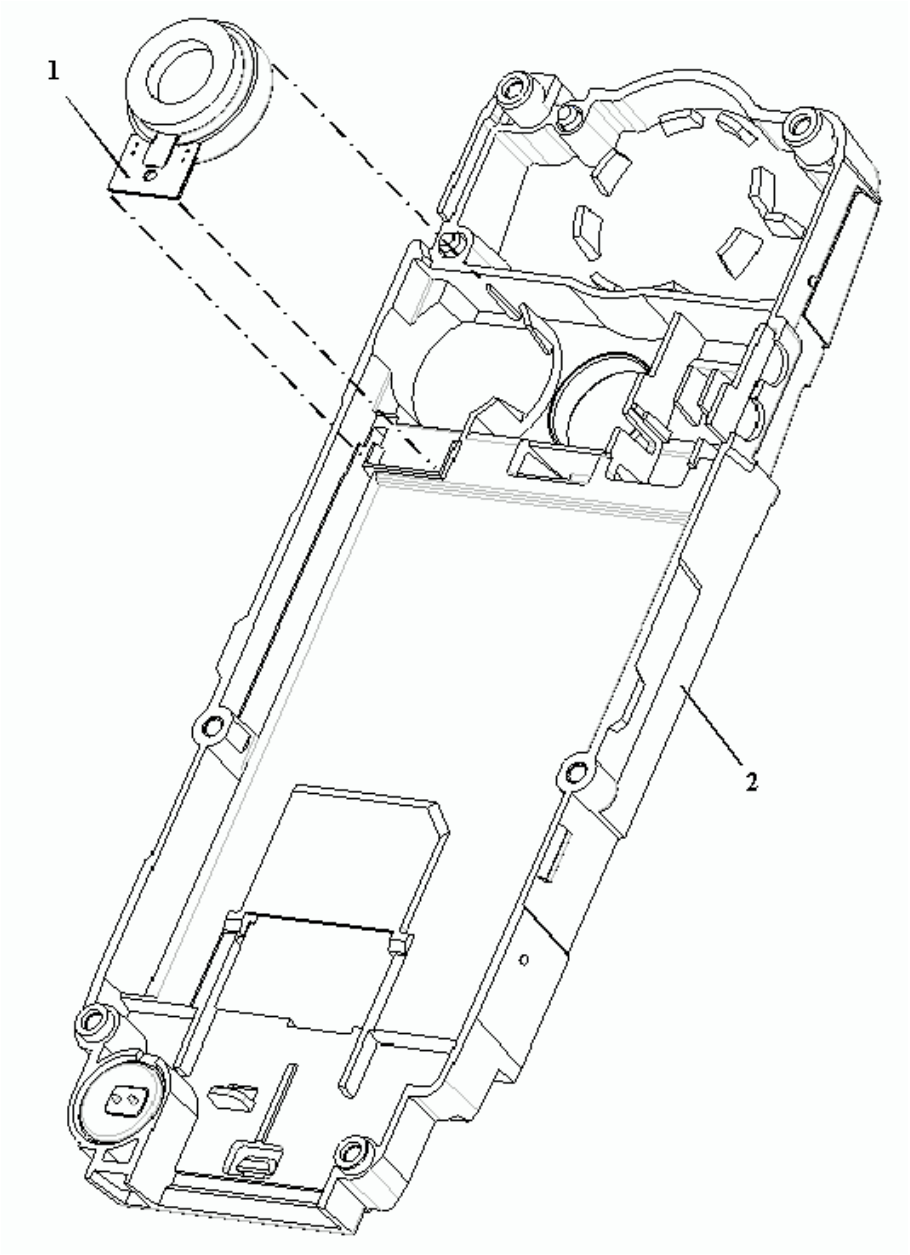
1
2

1.1. Tools :

- A 0.6mm torx screwdriver
- Gloves
- Insertion/extraction Flex tool
- Tweezers

<u>Notice</u>: This procedure must be performed by an technician provided with gloves , to avoid any risk of pollution.

1.2. Preliminary operation :

1. Remove the back cover (Proc sheet 0 01).
2. Remove the battery (Proc sheet 0 02).
3. Remove the front cover (Proc sheet 0 03).
4. Unscrew the six attachment screws on the electronic board.
5. Remove the assembly display , then the light guide keypad (Proc sheet 1 02 / 1 03)
6. Remove the electronic board (2).(Proc sheet 1 04)

1.3. Removal procedure :

1. Use tweezers to remove camera joint
2. Remove the radio shielding (1) by means of tweezers
3. Lift connector lock up (4)
4. Remove delicately the camera (5)

1.4. Placement procedure:

1. Check that the connector lock (4) is lift up
2. Present the assembly camera (1) front of Zif connector (4)
3. Insert delicately the flex PCB into the Zif connector by using the flex tool
4. Press down the connector lock
5. Replace a new radio shielding (1)
6. Stick a new camera joint (3) on the radio shielding (1)

1.5. Further operations :

1. Remove the electronic board on the assembly plate (2). .(Proc sheet 1 04)
2. Replace the light guide keypad (Proc sheet 1.03)
3. Replace the assembly display (Proc sheet 1 02)

4. Position and tighten the six attachments screws with torx settings of **0,25 N.m.**
5. Replace the front cover /battery / back cover (Proc sheet 0 01 / 0 02 / 0 03).
6. Carry out the radio test (Test Sheet 06).

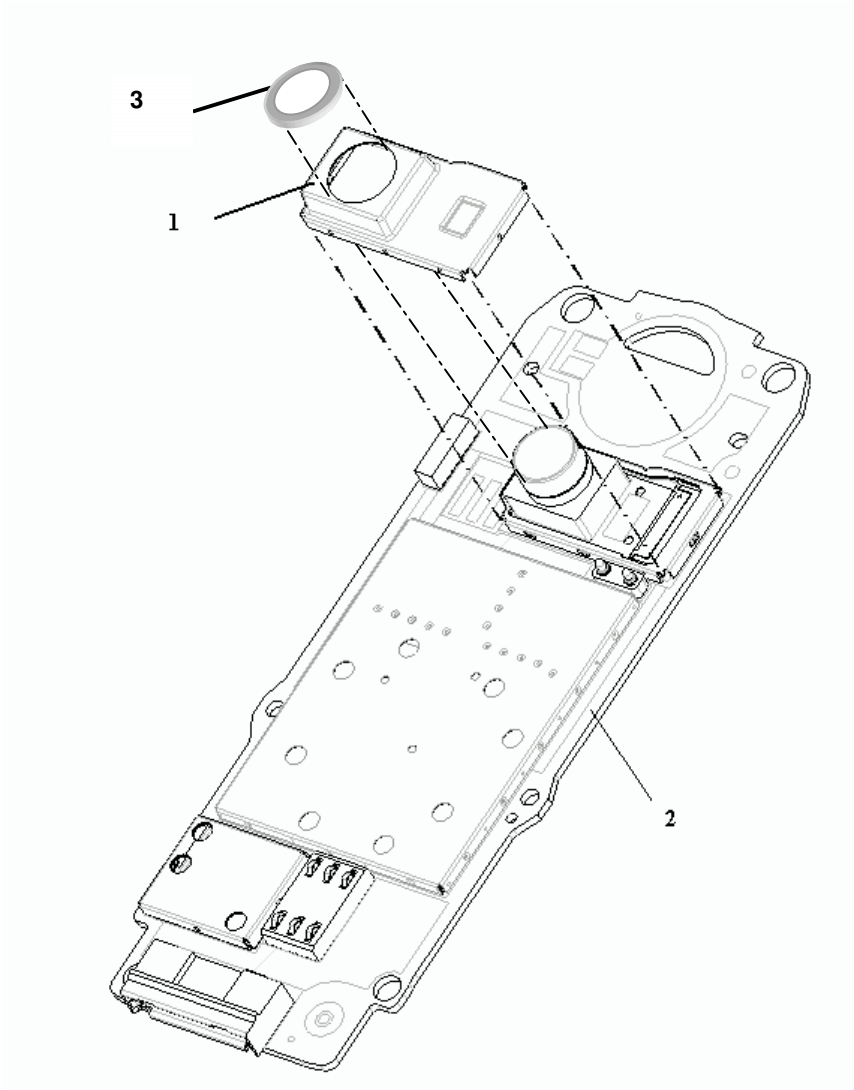
3
1
2

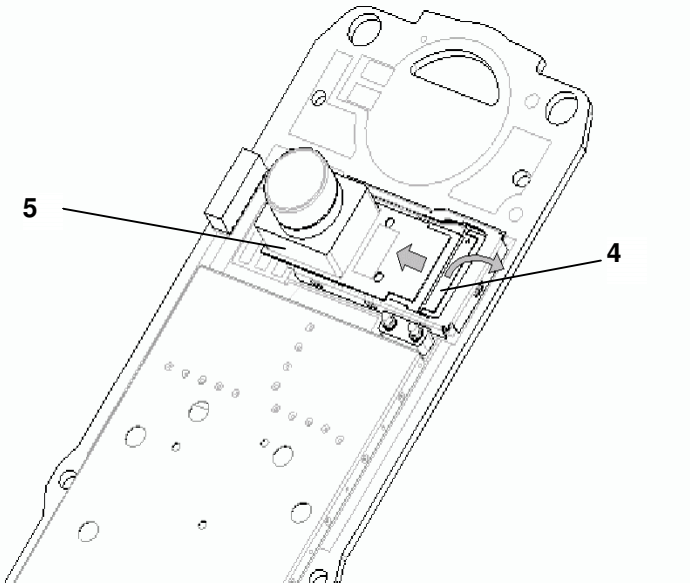
5
4

1.1. Preliminary operation

1. Control of the IMEI label integrity
2. Remove the electronic board (Proc sheet 1 04)
3. Control of any oxidation marks (on the electronic board and under the metal dome)

1.2. Return procedure :

(a) The electronic boards are packaged in individual electrostatic envelopes . They must be stocked in their original package of reception , to insure a good protection against external attacks (see enclosed photos)

(b) During the electronic boards manipulation , gloves and electrostatic strap must be worn at all times.

(c) The defective electronic boards have to be returned to SAGEM factory, packaged individually, in the original package (see enclosed photos) , in the appropriate ESD box : One box per Sagem reference (check reference written on the box).

(d) The defective board should display the defect code written on a sticker (placed on the shielding) and written on the ESD bag label too (printed with OMM).

Note :

On the defective boards , it is necessary to check visually under the metal dome to discover if it shows oxidation marks. The defective boards should be returned with their original metal dome

Boards with oxidation should not to set in conformance with the warranty

The defective boards must never be mixed with the complete mobiles

1.3. Placement procedure :

1. Exchange the defective board with a functional board of the same Sagem reference (25M).

1.4. Further operations :

1. Place the new electronic board on the assembly plate. .(Proc sheet 1 04)
2. Replace the customer housing (Proc Sheet 0 03 et 1 01)
3. Follow stages (see enclosed photos) and the OMM instructions (Proc sheet 01)

Example of electronic boards packaging :

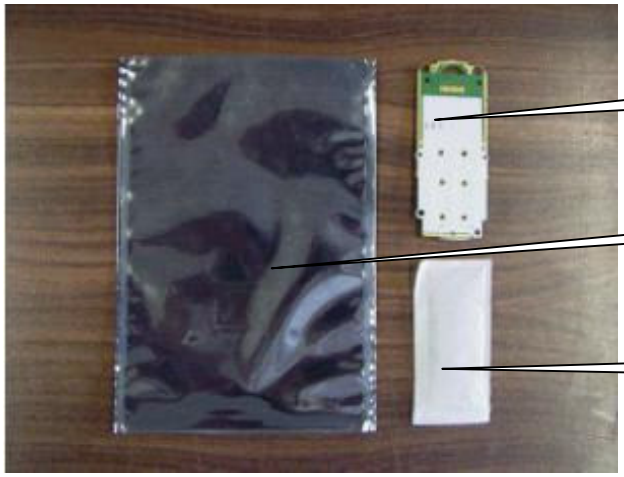

Boards packaging SAGEM -> ARC

Boards packaging ARC -> SAGEM

ESD shielding bag closed by the product label

ESD shielding bag closed by the IMEI label

Write the defect code on the label

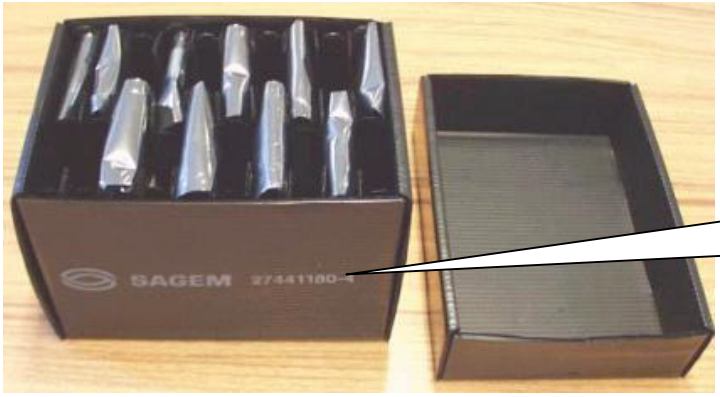

SAGEM electrostatic shielding box

Reference 20 boards: 27441180-4

Reference 100 boards: 27 511110-6

Electronic board exchange process

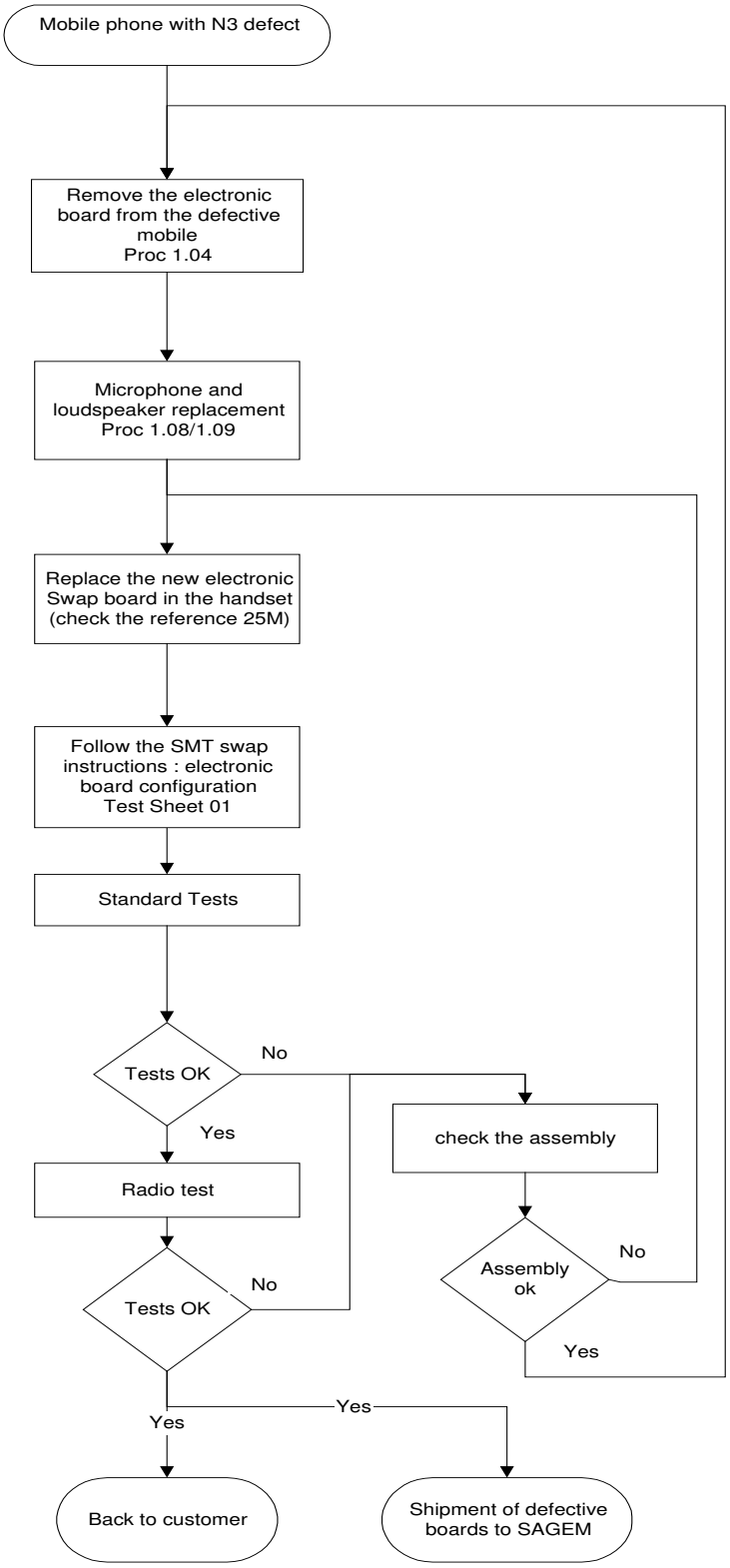

Detection of N3 defect : See the Technical documentation

-check the metal dome . In case of damage or oxidation , replace it.

- Functional tests
- Display test : Hot Line Menu
- Keypad test
- Vibrating device test

- See Technical Documentation (test sheet 06)

- Follow return instructions page 5-37

LEVEL 3 MAINTENANCE

IMPORTANT

Mobile packaging sent to SAGEM S.A. :

Follow the Proc sheet 1.12

Packaging for swap or mobile components storage :

The swap and the mobile components must be stored with a particular care especially for the most sensible component (Display , loudspeaker etc…).

Informations CRA/CRA information :	***Garantie/Warranty :***
Nom/Name :	Garantie standard/Standard warranty : ☐
Rue /Street :	Déjà réparé/préviously repaired : ☐
Ville / City :	***Hors garantie/Out of warranty :***
Code postal /Poscode :	Garantie expirée /Expired warranty : ☐
Pays/Country	Mauvaise utilisation / Misuse : ☐
Telephone /Phone :	
Nom du produit/product :	N° Série/Sérial n° :
Date d'achat/Date of purchase	N° IMEI :

Code SAGEM		Type de défauts	Type of fault
		PROBLEME D'AFFICHAGE	**DISPLAY PROBLEM**
A1	☐	PAS D AFFICHAGE LED ETEINTES	NO POWER UP
A2	☐	PAS DAFFICHAGE LED ALLUMEES	NO WAKE UP
A3	☐	BLOCAGE DE L AFFICHAGE	FREEZES UP
A5	☐	AFFICHEUR CASSE	BROKEN LCD
A6	☐	LIGNE, DIGIT OU PIXEL MANQUANT, CONTRASTE, COULEUR	MISSING LINE, DIGIT or PIXEL, CONTRAST, COLOR
A7	☐	PB RETROECLAIRAGE	BACKLIGHTS PROBLEM
		PROBLEME D'ANTENNE	**ANTENNA PROBLEM**
A10	☐	ANTENNE CASSEE / ABSENTE	BROKEN / MISSING ANTENNA
		PROBLEME D'ALIMENTATION / CHARGEUR	**POWER SUPPLY / CHARGING PROBLEM**
B1	☐	CONTACT BATTERIE DU MOBILE DEFECTUEUX	DEFECTIVE MOBILE BATTERY CONTACT
B2	☐	CONNECTEUR DE CHARGE DU MOBILE DEFECTUEUX	DEFECTIVE MOBILE CHARGER CONNECTOR
B3	☐	ALIMENTATION CARTE DEFECTUEUSE	DEFECTIVE POWER SUPPLY OF THE BOARD
B4	☐	AFFICHAGE CHARGE DEFECTUEUX	DEFECTIVE CHARGE ICON DISPLAY
B5	☐	CONSOMMATION MODE ETEINT	CURRENT CONSUMPTION WITH PHONE OFF
B7	☐	PROBLEME D AUTONOMIE	AUTONOMY
B8	☐	BATTERIE DEFECTUEUSE	ELECTRICALLY DEFECTIVE BATTERY
B9	☐	TENUE MECANIQUE BATTERIE	MECHANICAL LOCK PROBLEM ON BATTERY
B10	☐	BATTERIE CASSEE	BROKEN BATTERY
B11	☐	CHARGEUR DEFECTUEUX	DEFECTIVE CHARGER
B12	☐	CHARGEUR CASSE	BROKEN CHARGER
B13	☐	COUPURE INTERMITTENTE AVEC REDEMARRAGE	INTERMITTENT SWITCH OFF WITH REBOOT
B14	☐	COUPURE INTERMITTENTE SANS REDEMARRAGE	INTERMITTENT SWITCH OFF WITHOUT REBOOT
		PROBLEME DE CLAVIER	**KEYBOARD PROBLEM**
C1	☐	CLAVIER INOPERANT	NOT FUNCTIONING KEYBOARD
C2	☐	PROBLEME TOUCHE LATERALE	LATERAL TOUCH PROBLEM
		MESSAGE D'ERREUR	**ERROR MESSAGE**
D1	☐	SIM ABSENTE	SIM MISSING
D2	☐	AUTRES MESSAGES	OTHER MESSAGES
D3	☐	PB EEPROM	EEPROM
D4	☐	MOBILE NON REGLE	UNTUNED MOBILE
D5	☐	HARD FAILURE	HARD FAILURE
D6	☐	SIM VERROU	SIM VERROU
D7	☐	CODE POSTE	POST CODE BLOCKED
D8	☐	RETOUR SAV	SAV RETURN
D9	☐	BATTERIE INCONNUE	UNKNOWN BATTERY
		PROBLEME AUDIO	**AUDIO PROBLEM**
E1	☐	HP DEFECTUEUX (grésille)	DEFECTIVE LOUDSPEAKER (hails)
E2	☐	HP VOIX DEFORMEE OU PARASITES	LOUDSPEAKER VOICE DISTORTION
E3	☐	MICRO DEFECTUEUX	DEFECTIVE MICROPHONE
E4	☐	MICRO VOIX DEFORMEE OU PARASITE (DISTANT)	MICRO VOICE DISTORTION
E5	☐	PROBLEME DE VIBREUR	VIBRATING DEVICE PROBLEM
E6	☐	CONNECTEUR AUDIO DEFECTUEUX	DEFECTIVE AUDIO CONNECTOR
		PROBLEME DE COMMUNICATION	**COMMUNICATION PROBLEM**
F1	☐	PAS DE LOCALISATION RESEAU	NO NETWORK RETRIEVAL
F2	☐	COUPURE DE COMMUNICATION	INTERMITTENT CALLS DROP
F4	☐	TEST RADIO NON OK	TEST RADIO NO OK
F5	☐	ECHEC APPEL SORTANT	OUTGOING CALL FAILURE
F6	☐	ECHEC APPEL ENTRANT	INCOMING CALL FAILURE
F7	☐	PERTE TEMPORAIRE DE RESEAU	NETWORK TEMPORARY DROP
		PROBLEME COSMETIQUE / DEFAUT VISUEL	**COSMETIC PROBLEM**
G1	☐	VITRE CASSEE OU ABIMEE	BROKEN OR DAMAGED GLASS
G2	☐	COQUE CASSEE OU ABIMEE	BROKEN OR DAMAGED COVER
G3	☐	FLAP CASSE OU ABIME	BROKEN OR DAMAGED FLIP
G5	☐	CLAVIER CASSE OU ABIME	BROKEN OR DAMAGED KEYBOARD
G6	☐	BOUTON VERROU DEFECTUEUX	DEFECTIVE LOCK BUTTON
		AUTRES PROBLEMES	**OTHER PROBLEM**
H1	☐	KIT ACCESSOIRES HS	BROKEN OR DAMAGED ACCESSORY
H2	☐	FONCTION FM (MOBILE)	FM FUNCTION (Mobile)
H3	☐	FONCTION MONETIQUE	MONETIC FUNCTION
I1	☐	TRACE D OXYDATION	OXYDATION MARKS
I3	☐	PAS DE DEFAUT CONSTATE	NO FAULT FOUND
I5	☐	MANQUE FONCTION DANS MENU	LACK FUNCTION IN THE MENU
I6	☐	CONNECTEUR SIM DEFECTUEUX	DEFECTIVE SIM CONNECTOR
I7	☐	DYSFONCTIONNEMENT D'UNE FONCTION DU MENU	MALFUNCTION OF THE MENU
I8	☐	RECONFIGURATION DU MOBILE	MOBILE RETROFIT
		PROBLEME MULTIMEDIA	**MULTIMEDIA PROBLEM**
K1	☐	PROBLEME DATA (SMS, EMS, SMS,GPRS, WAP, TELECHARGEMENT JEUX, SONNERIES, SAUVEUR D'ECRAN, NE COMMUNIQUE PAS AVEC UN PC, POCKET PC OU PALM)	DATA PROBLEM (SMS, EMS, SMS,GPRS, WAP, DOWNLOADING GAMES, RINGING TONES, SCREEN SAVER, NO COMMUNICATION WITH A PC, POCKET PC or PALM)
K2	☐	FONCTION VIDEO	VIDEO FUNCTION
K3	☐	FONCTION INFRAROUGE (IRDA)	INFRARED FUNCTION (IRDA)

Cachet du Vendeur/Dealer's Stamp :	***Informations Client /Information :***
	Nom/Name :
	Rue /Street :
	Ville / City :
	Code postal /Postcode :
	Pays/Country
	Telephone /Phone :
Nom du produit/product :	N° Série/Sérial n° :
Date d'achat/Date of purchase	N° IMEI :
Garantie/Warranty :	***Hors garantie/Out of warranty :***
Garantie standard/Standard warranty : ☐ Déjà réparé/préviously repaired : ☐	Garantie expirée /Expired warranty : ☐ Mauvaise utilisation / Missuse ☐

Code SAGEM			Type de défaut	Kind of fault
A0	☐		AFFICHAGE DEFECTUEUX	DISPLAY MALFUNCTION
A10	☐		ANTENNE CASSEE / ABSENTE	ANTENNA BROKEN / MISSING
B0	☐		ALIMENTATION/CHARGE	POWER SUPPLY / NO CHARGE
B7	☐		PROBLEME D'AUTONOMIE	AUTONOMY
B8	☐		BATTERIE DEFECTUEUSE	BROKENBATTERY
B11	☐		CHARGEUR DEFECTUEUX	CHARGER MALFUNCTION
C0	☐		PROBLEME CLAVIER	KEYBOARD MALFUNCTION
C2	☐		PROBLEME TOUCHE LATERALE	LATERAL TOUCH PROBLEM
D0	☐		MESSAGE D'ERREUR	ERROR MESSAGE
D1	☐		SIM ABSENTE	SIM MISSING
D7	☐		CODE POSTE	POST CODE BLOCKED
E0	☐		PROBLEME AUDIO	AUDIO PROBLEM
E3	☐		MICRO DEFECTUEUX	MICROPHONE MALFUNCTION
E5	☐		PROBLEME DE VIBREUR	VIBRATING DEVICE MALFUNCTION
F0	☐		PROBLEME DE COMMUNICATION	COMMUNICATION MALFUNCTION
G1	☐		VITRE CASSEE OU ABIMEE	BROCKEN GLASS
G2	☐		COQUE CASSEE OU ABIMEE	BROCKEN COVER
G3	☐		FLAP CASSE OU ABIME	BROKEN FLIP
G5	☐		CLAVIER CASSE OU ABIME	BROCKEN KEYBOARD
G6	☐		BOUTON VERROU DEFECTUEUX	DEFECTIVE LOCK BUTTON
K2	☐		FONCTION VIDEO	VIDEO FUNCTION
K3	☐		FONCTION INFRAROUGE (IRDA)	INFRARED FUNCTION (IRDA)
K4	☐		FONCTION WAP	WAP FUNCTION
K5	☐		FONCTION GPRS	GPRS FUNCTION
K6	☐		FONCTION SMS, EMS, MMS.	SMS, EMS, MMS FUNCTION
K7	☐		NE COMMUNIQUE PAS AVEC UN PC	NO COMMUNICATION WITH A PC
K8	☐		NE COMMUNIQUE PAS AVEC UN POCKET PC OU PALM	NO COMMUNICATION WITH A POCKET PC or PALM
K9	☐		LIAISON DATA (MESSAGE "AUCUNE PORTEUSE DETECTEE")	DATA (MESSAGE "NO CARRIER DETECTED")
K10	☐		TELECHARGEMENT JEUX	DOWNLOADING GAME
K11	☐		TELECHARGEMENT IMAGE / SON / ECONOMISEUR D'ECRAN	DOWNLOADING PICTURE / RINGTONE / SCREEN SAVE
H1	☐		KIT ACCESSOIRES HS	BROCKEN ACCESSORIES
H2	☐		FONCTION FM (MOBILE)	FM FUNCTION
H3	☐		FONCTION MONETIQUE	MONETIC FUNCTION
I5	☐		MANQUE FONCTION DANS MENU	LACK FUNCTION IN THE MENU
I7	☐		DYSFONCTIONNEMENT D'UNE FONCTION DU MENU	MALFUNCTION OF THE MENU
I8	☐		RECONFIGURATION DU MOBILE	MOBILE RETROFIT
I0	☐		AUTRES DEFAUTS A PRESICER	OTHERS / TO BE PRECISED

OUT OF WARRANTY INTERVENTION

Notice: The handsets requiring the replacement of system connectors cannot be repaired under Sagem warranty.

The eventual deterioration of the board due to a bad replacement of the connector fall under the Repair Centre responsibility.

- Replacement procedure of DATA/ AUDIO/ CHARGE connector

1-Disassemble the handset Proc 1 04

2-Replace the defective connector (see below) **Ref 18 598 906-8**

3 - Replace the electronic board in the mobile phone Proc 1 04

4 -To test the replacement of the connector, it is necessary to:

a) Connect the mobile phone on SMT maintenance software (test Sheet 01)

b) Make real calls with a pedestrian handsfree Kit **Reference :23 812 517-0**

c) Test the charge of mobile phone

5 - Standard test after repair

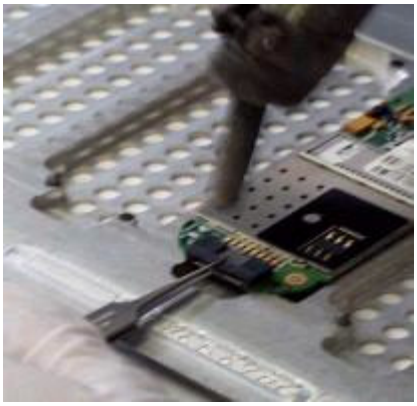

- Maintain the electronic board
- flux Correctly the pins of the connector.
- Reference of the flux to be used:
- LITTON flux -Supplier reference 952-D6
  -SAGEM reference18 775 103-7
- With tweezers, hold the connector and heat the pins up.

ATTENTION:

-Do not pull the connector but let it come , in order to avoid destroying the pads

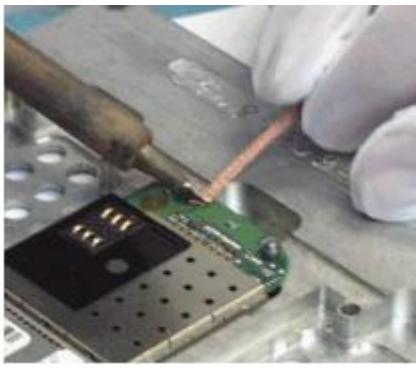

After having removed the connector, uncork rather quickly the four holes of the connector while the tin is still warm.

Flux and heat the pads in place of the connector to equalise the foot prints

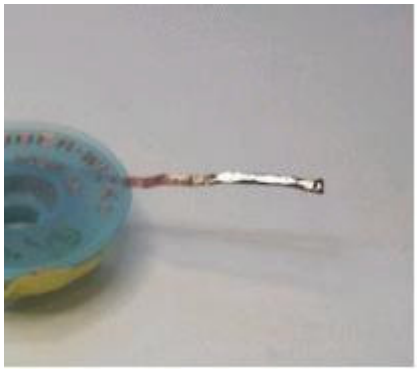

In order to tin the pins of the DATA/ AUDIO/ CHARGE connector, load the solder wick with tin on approximately 1 inch.

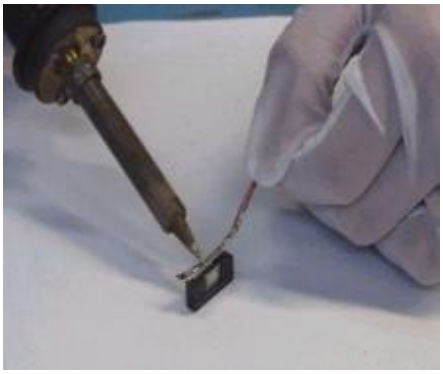

Before any operation,

-flux correctly the pins of the connector.

-with the solder wick loaded with tin , tin the pins of the DATA/ AUDIO/ CHARGE connector by positioning it straight ahead (pads upward), and by heating the solder wick which is in touch with pins.

Attention:

- At the end of the operation , verify that there is no short circuit between pads

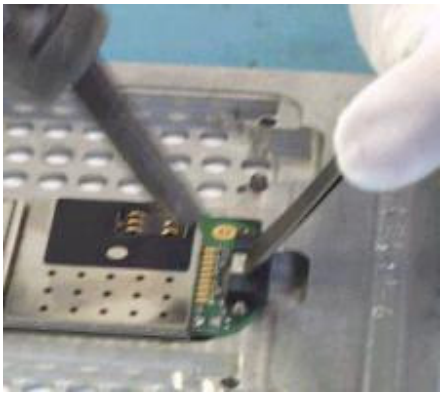

-Start soldering the connector pins.

-Flux the place of the connector and position the DATA/ AUDIO/ CHARGE connector.

-Verify that the pins of the DATA/ AUDIO/ CHARGE connector are well centred on pads.

-Heat pins with an air blow device while maintaining the connector with tweezers

-Verify that there is no short-circuit, that solders are shiny

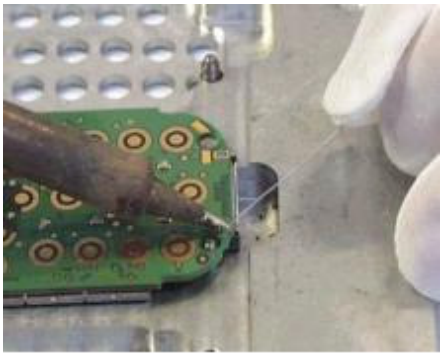

At last, solder the 4 pins crossing the board..

CHAPTER 6 - ACCESSORIES

6.1. 12 V / 24 V CHARGERS

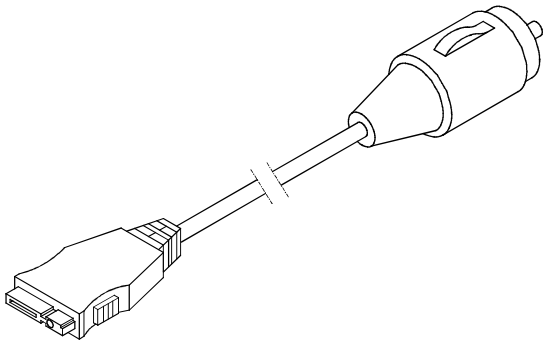

6.1.1. Description

This charger is for use in a car (or truck) only. The adapter is fitted with a cigar lighter type connector. AC1 is used to charge a mobile on a cigar lighter connector.

6.1.2. Characteristics

Item	Packaging reference	Input voltage	No load voltage	Output current
CIGAR LIGHTER CHARGER AC1	Blister	10.8 to 30 V=	6.5 V	500 mA

6.2. DESKTOP CHARGERS AND CRADLES

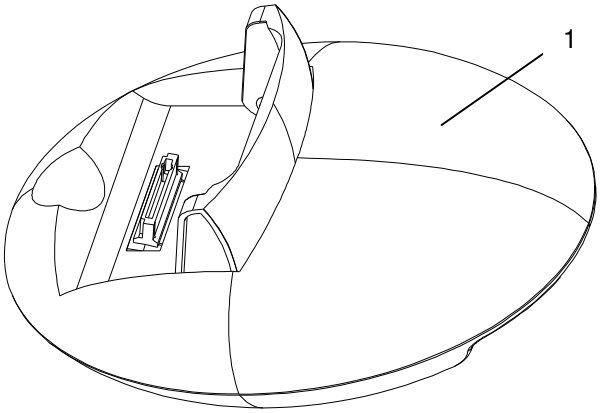

6.2.1. Description

This charger could charge a mobile, while acting as holder the handset.

6.2.2. Characteristics

Item	Designation	Nature
1	SIMPLE DESKTOP CRADLE	Simple support recess

6.3. CAR CRADLE

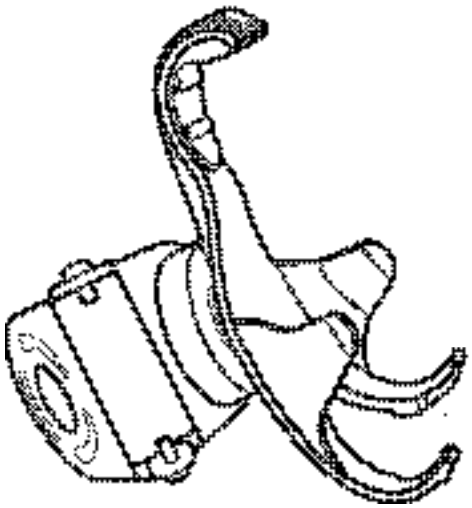

6.3.1. Description

Car cradle compatible with AC1 or antenna adapter.

6.3.2. Characteristics

Item	Packaging	Comments
CAR CRADLE KIT mechanical	BLISTER	Mechanical craddle

6.4. FULL DUPLEX CAR HANDSFREE KIT

6.4.1. Description

Rapido Kit : "compact" kit on cigar lighter,
Kit K3 : "confort" kit for integration in car with phone equipment.

6.4.2. Characteristics

Item	Packaging	Comments
Rapido kit	Box	No antenna.

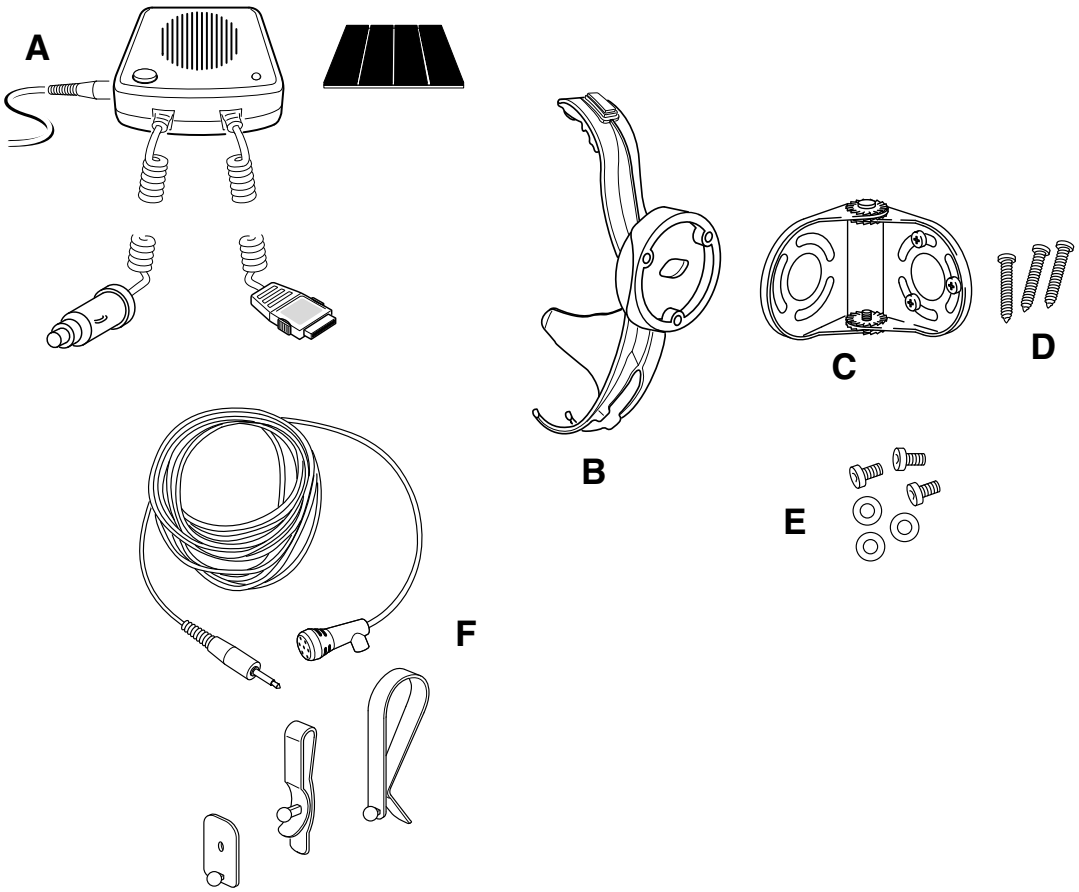

A : Connecting case and loudspeaker.

B : Cradle.

C, D et E : Support kit.

F : Microphone.

Item	Packaging	Comments
KIT K3	Box	No antenna. Requires car installation 900/1800 MHz dual band

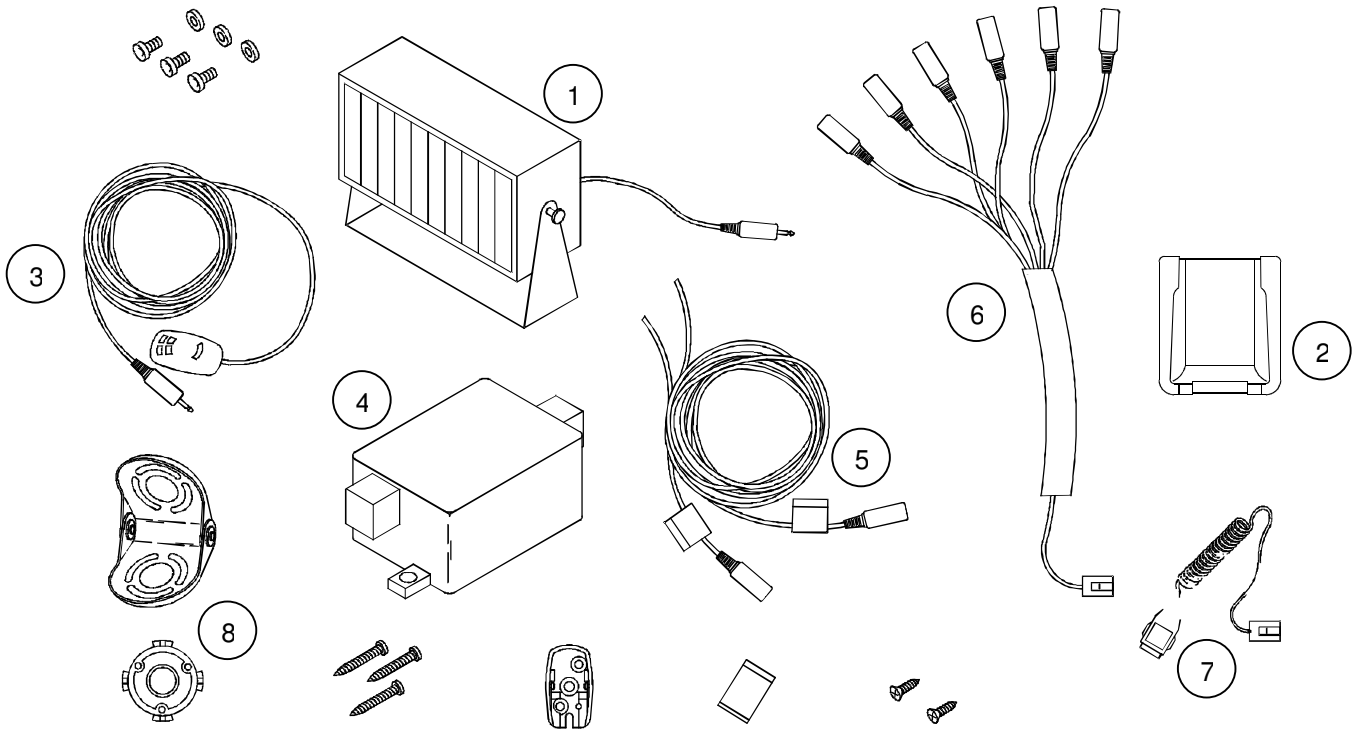

1 : Loudspeaker.

2 : Cradle.

3 : Microphone.

4 : Connecting case.

5 : Power supply cable.

6 : Cable : microphone, loudspeaker, car ⇔ connecting case.

7 : Cable : mobile ⇔ connecting case.

8 : Support kit.

6.5. PEDESTRIAN HANDSFREE KIT

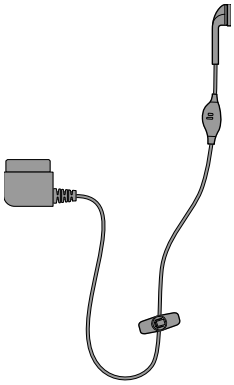

6.5.1. Description

Ear support with microphone on the cable for handsfree conversation.

6.5.2. Characteristics

Item	Dimensions	Loudspeaker impedance	Microphone
PEDESTRIAN HANDSFREE KIT	Length: 1.25 m Dist. micro/loudspeaker: 25 cm	150 Ω 119 dB SPL	2,2 kΩ -42 dB SPL

6.6. DATA CABLES

6.6.1. Description

Data cables are used for transferring data through standard equipment.

6.6.2. Characteristics

Item	Packaging	Target mobile	Mobile link to	Signals
DATA CABLE	Blister	Range 900/3000/myX-3/myX-5/myX-7/ myV-75	PC	Standard V28 3V<Us<-3V Fmax = 115kbauds
DATA CABLE PC/USB	Blister	MyX-6/myX-7/ myV-75	PC	

CHAPTER 7 - TECHNICAL INFORMATION BULLETIN

4.4 PURPOSE

The purpose of the Technical Information Bulletin (TIB) is to complete the maintenance operations described in this document. They give to the repair centers the complementary technical informations and the corrective procedures to be applied to maintain the product following it's evolution.

4.5 APPLICATION

The Technical Information Bulletin (TIB) are reference and must be applied by the repair centers.

The Technical Information Bulletin (TIB) will be sent only to the concerned repair centers. The Technical Data Bulletin will not be received by the repair centers with a reference number in sequence.

The follow up of the Technical Information Bulletin (TIB) and the action being to be performed are under the responsibility of the repair centers.

CHAPTER 8 - ILLUSTRATED PART CATALOG

8.1 myX-7/ myV-75 spare parts

SSEMBLY	QTY	DESIGNATION
10	1	Front cover
15	1	Elastomer keyboard
20	1	Rear cover
25	1	Assembly plate
30	1	Metal dome
35	1	Light guide keypad
40	6	RLX 1,8-6 screw
45	1	color display
50	1	Display support
55	1	Display clamp
60	1	Plate
65	1	Microphone
70	1	SIM locker
75	1	Vibrate
80	1	Battery connector
85	1	Loudspeaker with housing
90	1	Camera joint
95	1	Radio shielding camera

100	1	Assembly camera
105	1	Electronic board

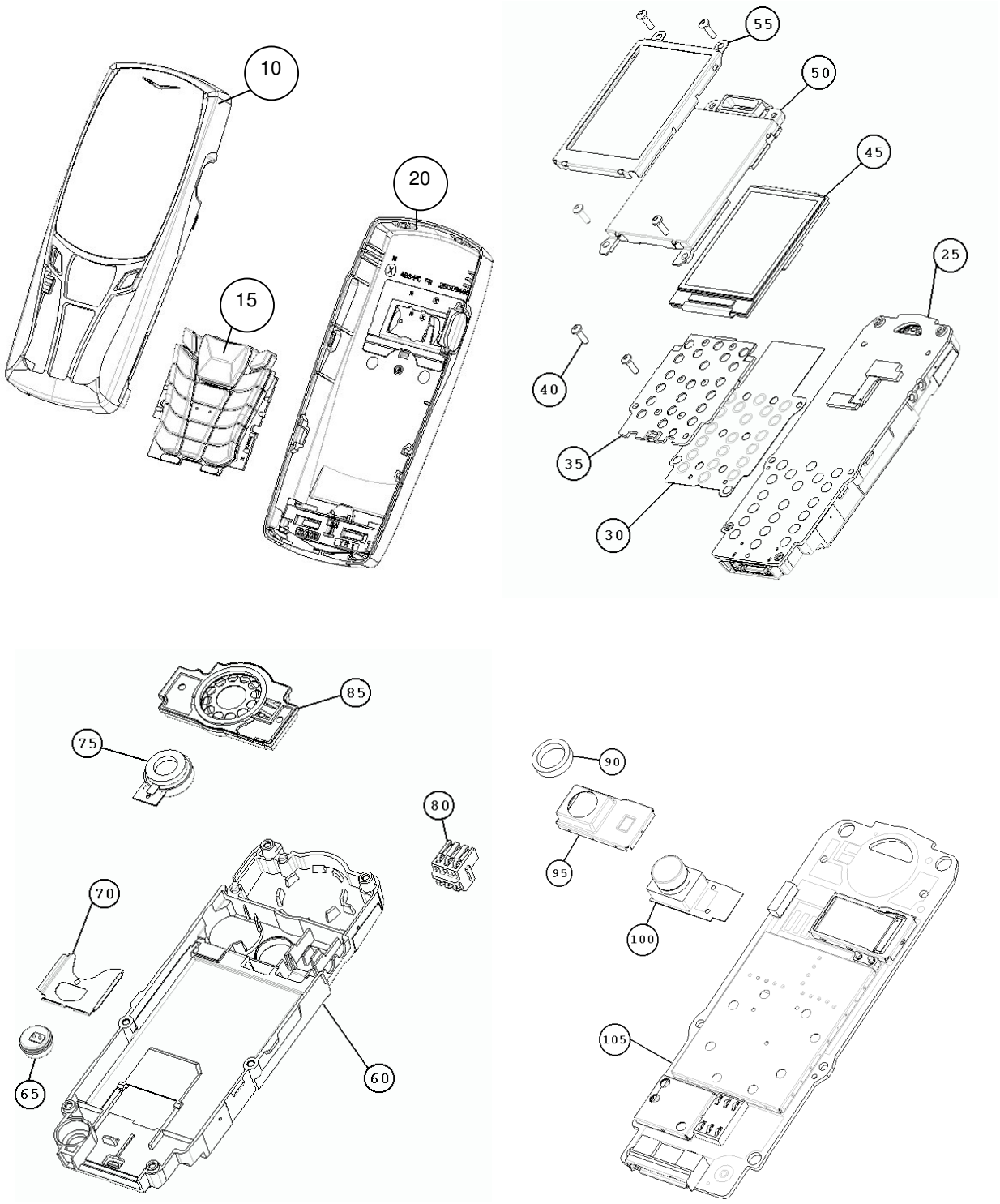
10
20
15
55
50
45
25
40
35
30
85
75
80
90
95
70
100
105
65
60

APPENDIX 1 - COMPOSITION TABLE

1.1. PURPOSE

This chapter contains the SAGEM codes of articles mentioned throughout the Site Technical Documentation.

1.2. LIST OF ARTICLES

TEST TOOLS	
Designation	**Reference**
ed downloading kit	23 810 395-5
charger test kit	23 810 480-8
7/ myV-75 LCD/Metal dome jig	25 130 689-1
7/ myV-75 radio interface	25 126 393-4
7/ myV-75 ammeter interface	25 130 973-0
nsert tool	25 131 873-4
Chart	25 134 968-5

12 V / 24 V CHARGERS	
Designation	**Reference**
Cigar-lighter charger AC1	23 810 045 - 9

DESKTOP CHARGERS	
Designation	**Reference**
Desktop charger	23 812 376 - 7

FULL DUPLEX CAR HANDSFREE KIT	
Designation	**Reference**
Kit K3	23 811 416 - 4
Rapido Kit	23 811 861 - 7
Simple car support	23 812 339 - 5

PEDESTRIAN HANDSFREE KIT	
Designation	**Reference**
Pedestrian handsfree kit	18813380-3