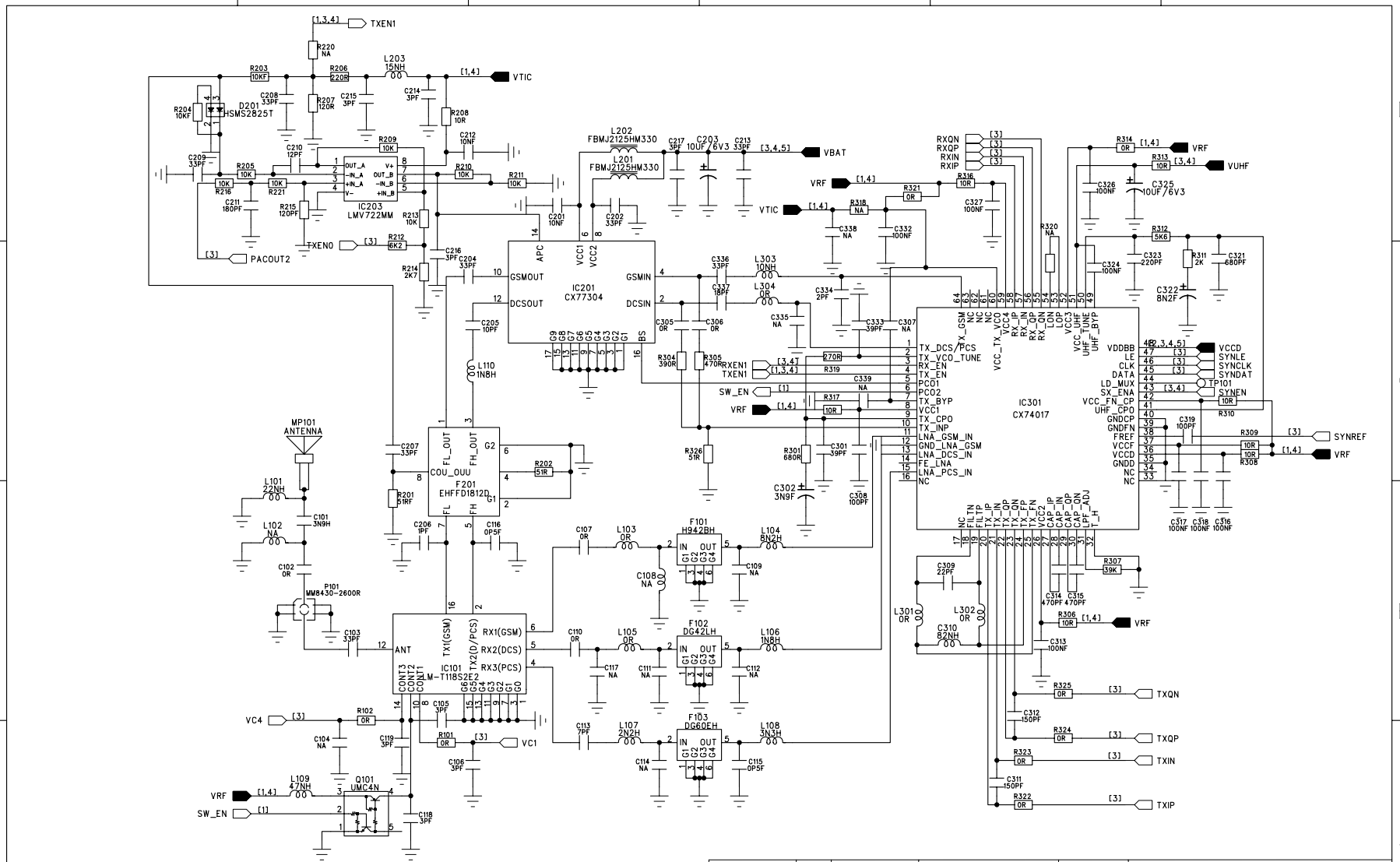

ECR No.	Rev.	Date/Name
MDK/P02/014	1	130802/SM
MDK/P02/024	2	240902/SM
MDK/P02/025	5	260902/SM

maxon
Niels Jernes Vej 8
DK-9220 Aalborg Øst
Tlf. +45 96355500

Material:

Scale:

Description: Main board MX-5010 RF section

Format: A3 | Sheet: 2 of: 2 | Dwg: 07250205

Name: ED | Date: 230801 | Item: 08250005

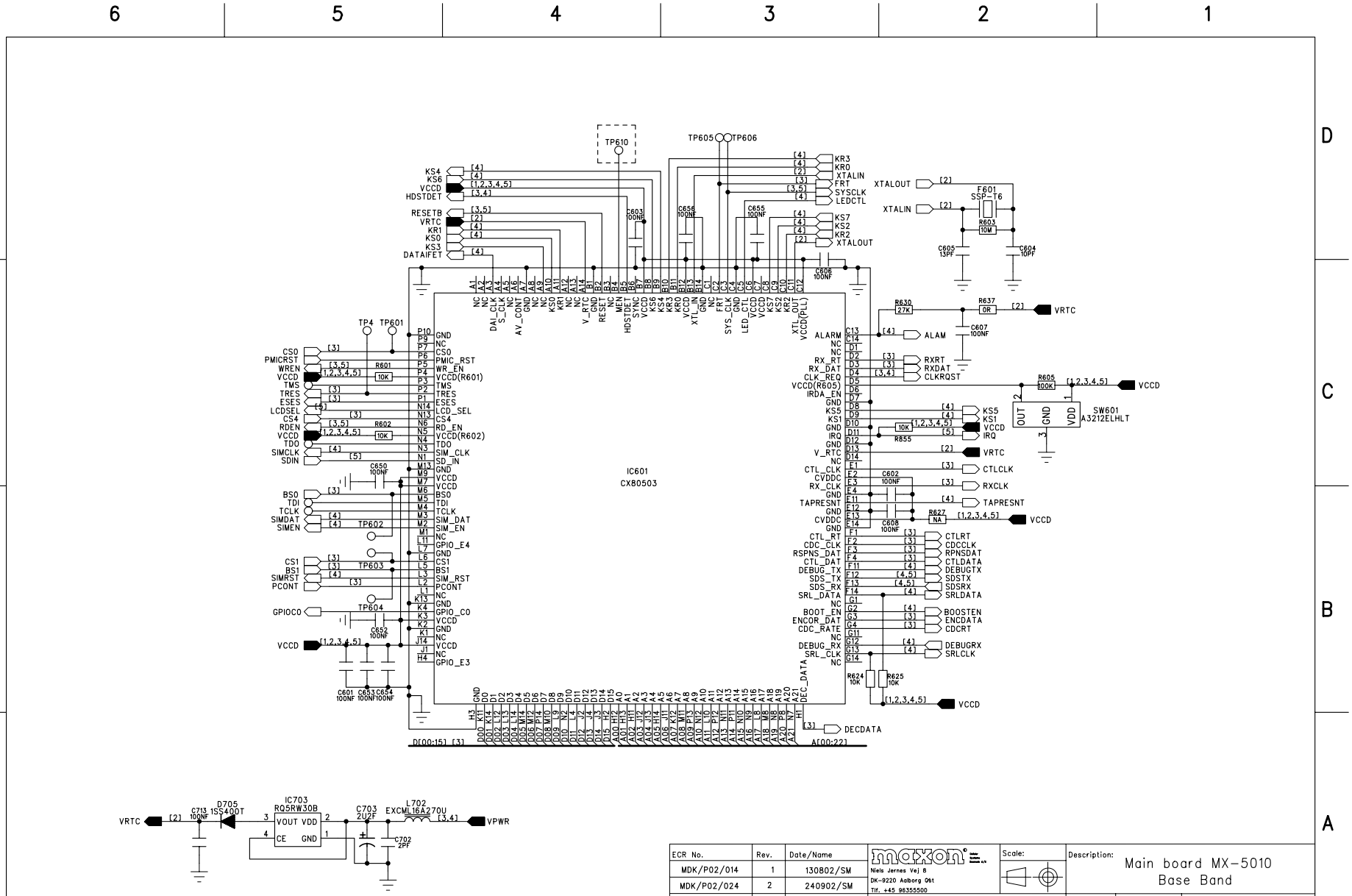

ECR No.	Rev.	Date/Name
MDK/P02/014	1	130802/SM
MDK/P02/024	2	240902/SM
MDK/P02/025	5	260902/SM

maxon motor
Niels Jernes Vej 8
DK-9220 Aalborg Øst
Tlf. +45 96355500

Material:

Scale:

Description: Main board MX-5010 Base Band

Format:	Sheet:	Dwg:
A3	2 of: 2	07250205
Name: ED	Date: 230801	Item: 08250005

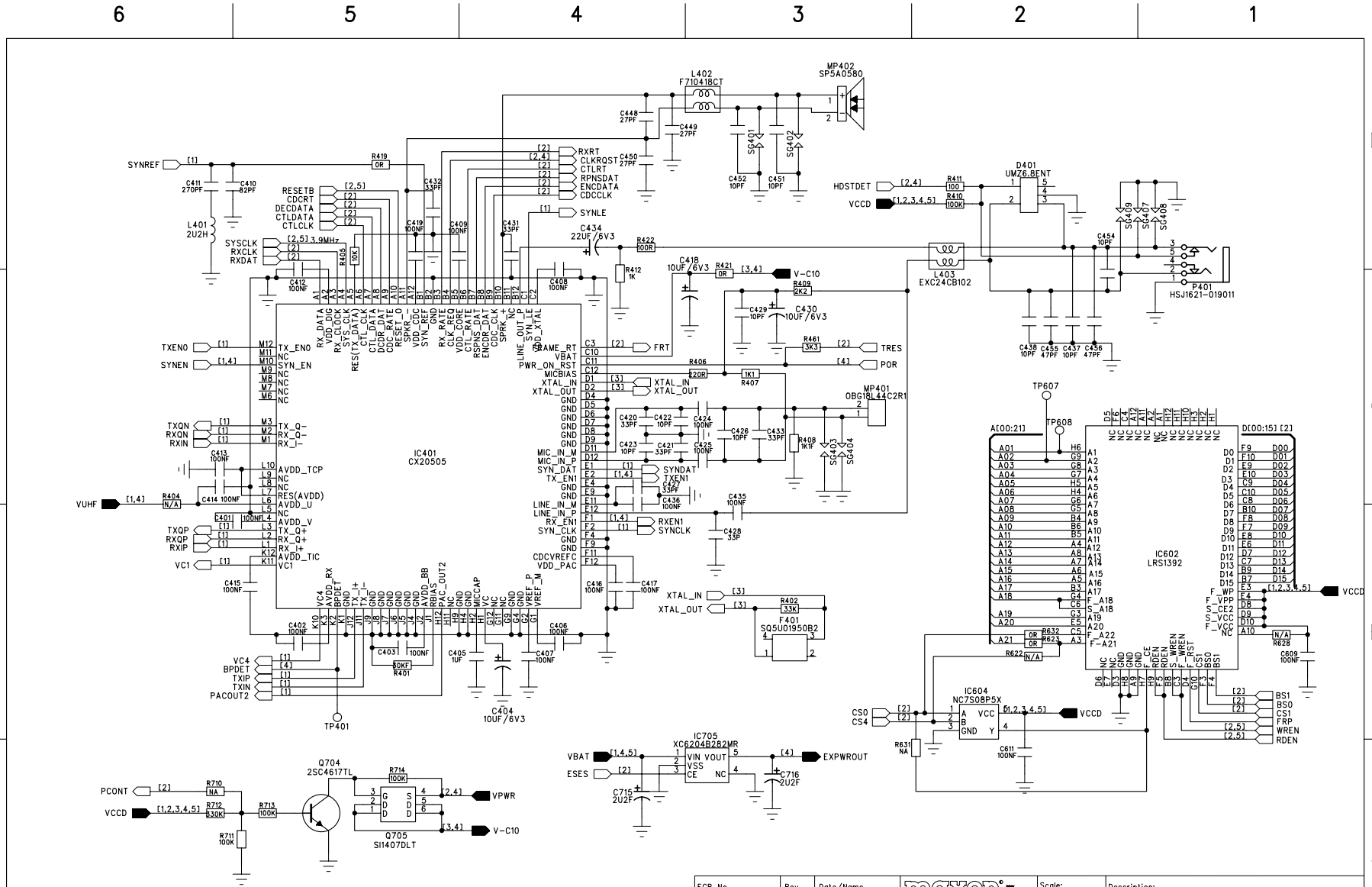

ECR No.	Rev.	Date/Name
MDK/P02/014	1	130802/SM
MDK/P02/024	2	240902/SM
MDK/P02/025	5	260902/SM

maxon
Niels Jernes Vej 8
DK-9220 Aalborg Øst
Tlf. +45 96355500

Material:

Scale:

Description: Main board MX-5010 CODEC & Memory

Format: A3 | Sheet: 2 of: 2 | Dwg: 07250205

Name: ED | Date: 230801 | Item: 08250005

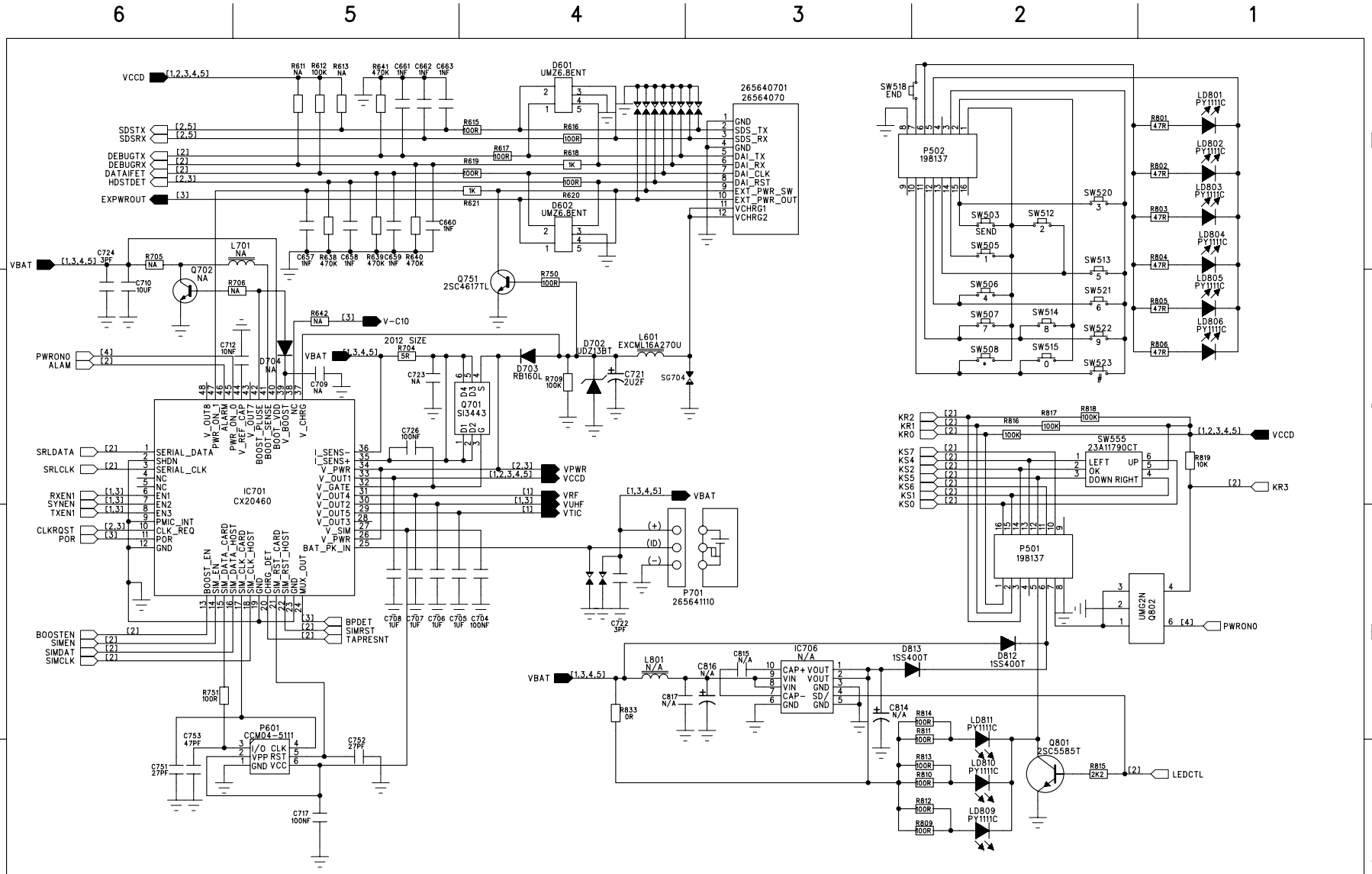

ECR No.	Rev.	Date/Name
MDK/P02/014	1	130802/SM
MDK/P02/024	2	240902/SM
MDK/P02/025	5	260902/SM

maxon

Niels Jernes Vej 8
DK-9220 Aalborg Øst
Tlf. +45 96355500

Material:

Scale:

Description: Main board MX-5010 P/M & Connector/BACKLIGHT

Format:	Sheet:	Dwg:
A3	2 of: 2	07250205
Name: ED	Date: 230801	Item: 08250005